AUTOMATED SECTOR DEFINED WATER DISTRIBUTION SYSTEM

By

ABHINAV GAHARWAR [120460109059]

TEAM ID:33939

Guided By

PROF. RAVISHANKAR KUMAR

ELECTRICAL DEPARTMENT

UNIVERSAL COLLEGE OF ENGINEERING

AND TECHNOLOGY

A project report submitted to Gujarat Technological University

In partial fulfillment of the requirements for the Degree of Engineering

In Electrical

MAY 2015

Department of Electrical Engineering

Universal College of Engineering & Technology,

Ahmedabad

CERTIFICATE

This is to certify that work embodied in this entitled "**AUTOMATED SECTOR DEFINED WATER DISTRIBUTION SYSTEM**" was carried out by **ABHINAV GAHARWAR (120460109059)** at Universal College of Engineering and Technology, at Motibhoyan, Gandhinagar. For partial fulfillment of B.E. degree to be awarded by Gujarat Technological University. This work has been carried out under my supervision and is to my satisfaction.

Date:

Place:

PROF. RAVISHANKAR KUMAR

ELECTRICAL DEPARTMENT

UNIVERSAL COLLEGE OF ENGINEERING

AND TECHNOLOGY

DEPARTMENT OF ELECTRICAL ENGINEERING

UNIVERSAL COLLEGE OF ENGINEERING & TECHNOLOGY

AT: Motibhoyan, Gandhinagar

ACKNOWLEDGEMENT

The author extends his sincere thanks to **PROF. RAVISHANKAR KUMAR SIR** for his kind suggestions to work at **Universal College Of Engineering & Technology** and for guiding during the course of this work.

The author is thankful to **PROF. RAVISHANKAR KUMAR**, Electrical Engineering Department And Principle **Dr. N. K. Sherasiya** for their kind support.

My special thanks to my family members, for their unique support in successful completion of project. Finally I would like to thank each and every person who has directly or indirectly helped me in this project.

ABHINAV GAHARWAR _____

ABSTRACT

We find out, that now a day's water which is a basic requirement is not available to us easily. Although over society have transformed but still due to old methods of water distribution the water available to us has an irregularity in time as well as in its quantity. Our project shows a transformation in such non upgraded system. Project works on automation system which controls water distribution system in different sectors as well as help in solving the problem of unwanted water loss.

Table of Contents

TOPIC	Page No
Title Page	**I**
Certificate Page	**II**
Acknowledgements	**III**
Abstract	**IV**
List of Figures	**VIII**
CHAPTER 1: INTRODUCTION	**01**
1.1. IMPORTANCE OF WATER	01
1.2.WATER DISTRIBUTION SYSTEM	02
1.3.AUTOMATIC WATER DISTRIBUTION SYSTEM	02
1.4.IMPRORTANCE OF WATER DISTRIBUTION SYSTEM	02
CHAPTER 2: LITERATURE REVIEW	**04**
2.1. INTRODUCTION	04
2.2. SUMMARY OF PAPER REFERED	04
2.2.1.“STEPPER MOTOR CONTROL USING 89c51 MICROCONTROLLER”	04
2.2.2. “MICROCONTROLLER BASED AUTOMATIC WATER CONTROL SYSTEM”	04
2.2.3. “THEFT IDENTIFICATION AND AUTOMATED WATER SUPPLY SYSTEM USING EMBEDDED”	05
2.2.4. “DESIGN AND DEVELOPMENT STEPPER MOTOR POSITION CONTROL SYSTEM USING ATMEL 85c51 MICROCONTROLLER”	06
CHAPTER 3: CASE STUDY	**07**
3.1. INTRODUCTION	07
3.2. URBAN PROFILE	07
3.3 CITY CONFIGURATION	08
CHAPTER 4: PROBLEM DEFINITION AND REMEDIES	**12**

4.1 INTRODUCTION 12
4.2 PROBLEM AND ITS REMEDIES 12

CHAPTER 5: COMPONENTS OF AUTOMATIC WATER DISTRIBUTION SYSTEM 15
5.1 INTRODUCTION 15
5.2 WATER PUMP 15
5.2.1 POSITIVE DISPLACEMENT PUMP 16
5.2.2 PUMPS FOR OPEN AND CLOSED SYSTEM 18
5.3. MICROCONTROLLER 20
5.3.1 WHY ARDUINO? 20
5.3.2 WHAT IS INSIDE AN ARDUINO? 21
5.3.3 OVERVIEW 22
5.3.4 ATMEGA 328 23
5.4 MOTOR DRIVERS 25
5.4.1 OPERATION OF DRIVES 25
5.4.2 L293D 26
5.4.3 WORKING OF L293D 27
5.4.4 L293D LOGIC TABLE 27
5.5 WATER LEVEL INDICATOR 28
5.5.1 LEVEL SENSOR 28
5.5.2 TYPES OF LEVEL MEASUREMENT SENSORS 29
5.5.3 LEVEL SENSING TECHNOLOGY 30
5.6 SOLENOID VALVE 32
5.6.1 INTRODUCTION 32
5.6.2 POWER REQUIREMENT 33
5.6.3 WORKING 34
5.6.4 CIRCUIT FUNCTION 34
5.6.5 TYPES OF OPERATION 35
5.7 LED 38
5.7.1 INTRODUCTION 38
5.7.2 CONSTRUCTION OF LED 39
5.7.3 OPERATION OF LED 41

5.7.4 OUTPUT CHARACTERISTICS 42
5.7.5 APPLICATIONS OF LED 43
5.8 WATER METER 43
5.8.1 INTRODUCTION 43
5.8.2 THEORY OF METERING DEVICES 44
5.8.3 TYPES OF WATER METER 44
5.8.4 WHY WATER METERS ARE NECESSARY ? 45

CHAPTER 6: OPTIMIZATION OF AUTOMATIC WATER DISTRIBUTION SYSTEM 46
6.1 INTRODUCTION 46
6.2 BLOCK DIAGRAM 48
6.3 FLOW CHART 49
6.4 CIRCUIT DIAGRAM 54
6.5 PROGRAM OPTIMIZATION 55
6.6 ARDUINO PROGRAMMING 56
6.6.1 SPECIFICATION 56
6.7 OPERATIVE PROGRAM 57
6.8 CONCLUSION 58

CHAPTER 7: COSTING 59
7.1 INTRODUCTION 59
7.2 GENERAL AND ADMINISTRATIVE COSTS 59
7.3 QUOTATION 61

CHAPTER 8: FUTURE PROSPECTIVE 63
8.1 INTRODUCTION 63
8.2 GENERATION OF ELECTRICITY 63
8.3 AUTOMATIC IRRIGATION SYSTEM 63
8.4 AUTOMATED SECTOR DEFINED WATER DISTRIBUTION SYSTEN USING SOLAR ENERGY 63

REFERENCES 65

LIST OF FIGURES

FIGURES	TOPIC	PAGE NO.
Figure 1.1	GLOBAL DISTRIBUTION OF WATER	1
Figure 3.1	GUJARAT STATE URBAN PROFILE	7
Figure 3.2	AHMEDABAD CITY	8
Figure 3.3.1	AMC CITY PROFILE	9
Figure 3.3.2	METHOD OF WATER DISTRIBUTION	9
Figure 3.3.3	BLOCK DIAGRAM OF AHMEDABAD WATER DISTRIBUTION SYSTEM	10
Figure 3.3.4	AMC's WATER MANAGEMENT	10
Figure 3.3.5	WATER TREATMENT PLANT	11
Figure 5.2.1.1	POSITIVE DISPLACEMENT PUMP	16
Figure 5.3.1.1	ARDUINO UNO BOARD	21
Figure 5.3.4.1	ATMEGA 328 PIN DIAGRAM	24
Figure 5.4.1.1	L293D PIN STRUCTURE	27
Figure 5.4.4.1	FUNCTION STRUCTURE	29
Figure 5.6.2.1	SOLENOID VALVE	34
Figure 5.6.5.1	OPERATION OF SOLENOID VALVE	36
Figure 5.6.5.2	OPERATION OF SOLENOID VALVE	37
Figure 5.6.5.3	OPERATION OF SOLENOID VALVE	23
Figure 5.7.1.1	LED BIASING	39
Figure 5.7.1.2	SYMBOL OF LED	39
Figure 5.7.2.1	CONSTRUCTION OF LED	40
Figure 5.7.2.2	STRUCTURE OF CUP TYPE LED	41
Figure 5.7.3	OPERATION OF LED	41
Figure 5.7.4.1	LED IN FORWARD BIASED	42
Figure 5.7.4.2	RELATION B/W FORWARD CURRENT & LIGHT OUTPUT	43
Figure 6.1.1	OPERATION OF MICROCONTROLLER WHEN TANK IS EMPTY	46
Figure 6.1.2	OPERATION OF MICROCONTROLLER	47

	WHEN TANK IS FULL	
Figure 6.2.1	BLOCK DIAGRAM OF AUTOMATED WATER DISTRIBUTION SYSTEM	48
Figure 6.3.1	FLOW CHART OF PRIMARY WATER DISTRIBUTION SYSTEM	49
Figure 6.3.2	FLOW CHART OF WATER DISTRIBUTION SYSTEM IN SECTOR 1	50
Figure 6.3.3	FLOW CHART OF WATER DISTRIBUTION SYSTEM IN SECTOR 2	51
Figure 6.3.4	FLOW CHART OF WATER DISTRIBUTION SYSTEM IN SECTOR 3	52
Figure 6.3.5	FLOW CHART OF WATER DISTRIBUTION SYSTEM IN SECTOR 4	53
Figure 6.4.1	CIRCUIT DIAGRAM	54

Chapter-1
Introduction

1.1. Importance of water:

Water, the best dissolvent in the nature. Two thirds of the earth's surface covered by water and the human body consisting of 75 percent of it, it is evidently clear that water is one of the prime elements responsible for life on earth.

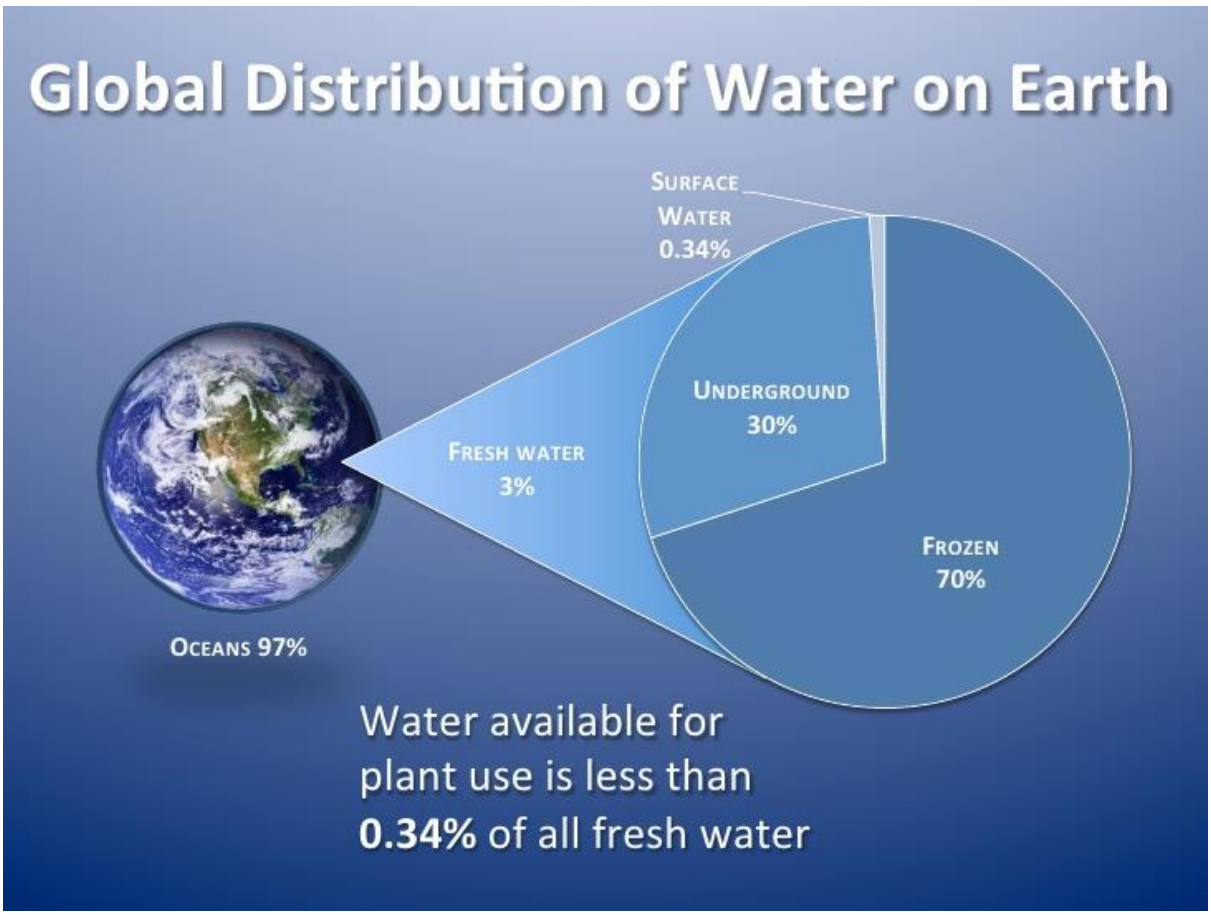

(Figure 1.1 global distribution of water)

1.2. Water Distribution System:

The water distribution system deals with distribution of water in the entire troposphere. The basic purpose of distribution system is to deliver water to consumer with required quality, quantity and pressure. The distribution system is used to supply water collectively from source to users.

The layout of distribution system should be such that every consumer should get adequate amount of water.

1.3. Automatic Water Distribution System:

Automated water distribution system is used to distribute the municipal water automatically. This proposed water equally to all street pipe line. So that everyone will get the equal amount of water. The water from the storage tank is measured with the help of level sensor. Here we also identify the water theft accurately during the distribution time period. This system consists of Microcontroller. Microcontroller is used to control the distribution of water. It works as an mediator between display unit and operating machines.

The system use microcontroller to automate the process of water pumping in an overhead tank storage system and has the ability to detect the level of water, switch ON and OFF to pump accordingly and display status on LED panel. The research has successively provided an improvement on old water distribution system.

A controller based automatic plant system's main aim was to provide automatic distribution of water with a system that operates with less man power. This in turn helps to save funds, water, man power and time consumption.

The microcontroller is used for giving the interrupt signal to control the entire signal.

1.4. Importance of Automatic Water Distribution System:

Water is important resource for all the livings in the earth. In that some people are not getting the sufficient amount of water because of unequal distribution of water. So only we implement this project.

This project is used to distributing the water equally. So that everyone gets the equal amount of water. It also used to prevent the water theft during the distribution period. In previous method, person in charge will go to that place and open the valve for a particular time period.

Once the time over again the in charge person will go to the same place and close the valve. It is wastage of time. The proposed system is fully automated. Here human work and time is reduced. The water wastages such as leakages, mankind laziness and operating error can be avoided.

Chapter 2
Literature Review

2.1 Introduction:-

A literature review for the project work was carried out. Various research paper have been referred .The literature review consists of paper referred from ieee journal , ijeee journal,and various Website. Web articles have also been studied relevant to the topic of work.

2.2 Summary of Papers Referred:-

2.2.1 "Stepper Motor control using 89c51 microcontroller"

Author name- Mandeep Singh Walia

Here's a stepper motor controller based on 89c51 microcontroller is used to control the rotation of a dc stepper motors in clockwise direction and anti-clockwise direction. The controller is simple and easy to construct and can be used in many application including machine control and robotics for controlling the axial rotation in xy plane.

Author also explains the measurement and control applications of stepper motor.

The stepping motor performance can also be improved by driving these motor at a voltage greater than what they are rated for .

2.2.2 "Microcontroller Based Automatic Water Level Control System"

Author name – Ejiofor Virginia Ebere(PhD), Oladipo Onaolapo Francisca(PhD) Lecturer , department of computer science , Nnamdi university, Nigeria

Water scarcity is one of the major problems of the world. Wastage of water during transmission has been identified as a major culprit, the research was presented in embedding a control system into an automatic water pump controller through the use of different technologies in its design, development, and implementation.

The system uses microcontroller to automate the process of water pumping in an overhead tank storage system and has the ability to detect the level of water in tank and display the status on an LED Panel.

The research has successfully provided an improvement on existing water level controls and calibrated circuit to indicate the water level and uses the DC instead of AC power thereby eliminating risk of electrocution.

The motivation of research was to bring a solution to the problem of water shortage in various places and eliminating the major culprit such as water of water during pumping and dispension into overhead tank.

2.2.3 "THEFT IDENTIFICATION ANDAUTOMATED WATER SUPPLY SYSTEMUSING EMBEDDED TECHNOLOGY"

Author-

Assistant Professor, Department of ECE, Bannari Amman Institute of Technology, Sathyamangalam, Tamilnadu, (India)

Asst. Prof.(Sr.Grade),Department of EIE, Bannari Amman Institute of Technology, Sathyamangalam, Tamilnadu,(India)

Assistant Professor, Department of ECE, KSR of College Engineering, Thiruchencode, Tamilnadu,(India)

In urban areas the water supply the residence and commercial establishments are provided at a fixed flow rate.There are cases of excess water drawing by certain users by connecting motor-pump sets to the waterlines which is considered as water theft. In this project it is proposed to develop an embedded system based watermonitoring and theft prevention system by recording the flow rates at the user end. In order to implement the proposed water supply system, each consumer end should be provided with an embedded system based water flow monitoring system consisting of a microcontroller to record the flow rate using a flow sensor and to transmit the same to a remote monitoring station using wireless transmitter and it is also provided with an electrically operated solenoid valve to supply water to the consumers. The valve turns on/off by the central processing station PC to stop the water supply whenever the flow rate exceeds a predefined limit. It is proposed to employ a GSM MODEM for

wireless communication so that the information can be passed to many responsible officers cell phone for immediate action.

2.2.4. Design and Development Stepper Motor Position Control System Using Atmel 85c51 Microcontroller

Kausik Chakraborty, Nisarga Chand, Bappadittya Roy Pabitra

Kumar Nandi Department of ECE

Department of ECE Mallabhum Institute Of Birbhum Institute of Engg. & Technology

Bishnupur, WB, India Technology , Suri, WB, India

Stepper motors are mainly used in open loop position control systems. But open loop control of stepper motor can cause loss of steps or slip of steps. To overcome these problems, closed loop position control is developed. In Order to show if any wrong position of stepper motor have been achieved. So in this paper, a system is described by microcontroller program which can control the position of stepper motor properly. The microcontroller is interfacing with ADC 0804 IC .This ADC interface is provided to set the position of the stepper motor angle. Drive the stepper motor for each step and read the output of opto-slot for movement of each step. Count the step value and display in LCD.

Chapter 3
Case Study

3.1Introduction

This proposed automated water distribution system is used to distribute the municipal water equally to all street pipe line. So that everyone will get the equal amount of water. The set point is fixed for each pipe line. The water from the storage tank is measured with the help of level sensor. . If the flow rate reaches its set point, the valve will turn off. Here we also identify the water theft accurately during the distribution time period. This system consists of microcontroller. microcontroller is used to control the distribution of water. Microcontroller gives the signal to the stepper motor according to the set point written in the program.

3.2 Urban Profile

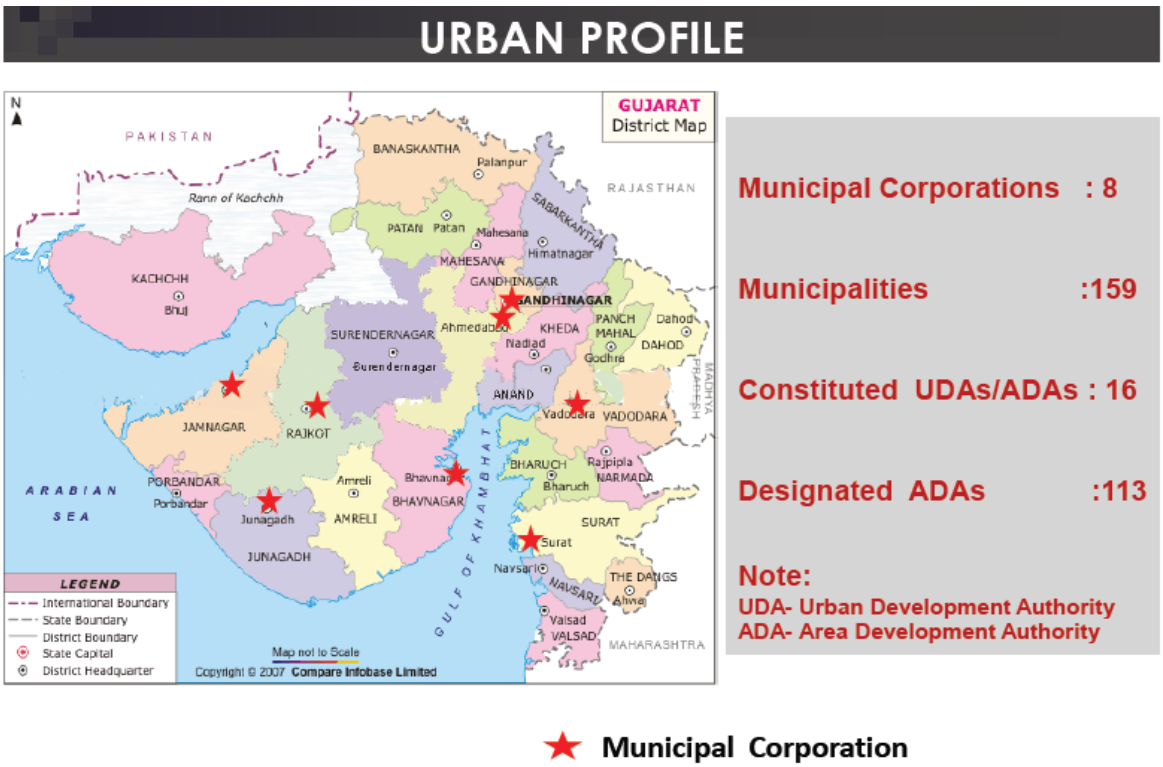

(Figure 3.1 Gujarat State Urban Profile)

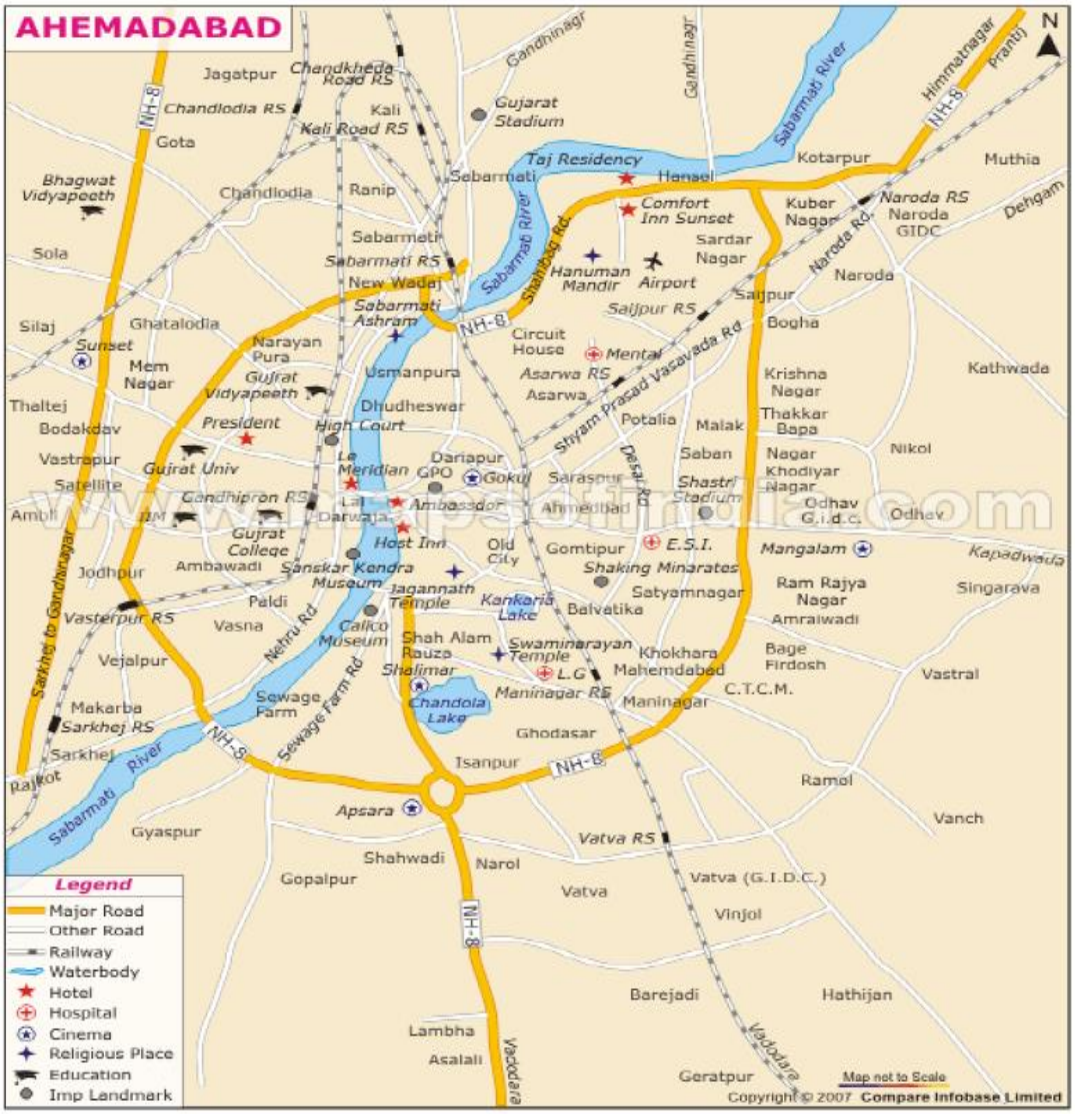

(Figure 3.2 Ahmedabad City)

3.3 City Configuration

Ahmadabad the financial capital of Gujarat and India's seventh largest city in terms of area and population and 4th largest in terms of economy, the population consists of nearly 5.6 million people spreaded over the area of 466 square kilometer.

One of the most basic necessities of these all nearly 6 million people is water.

Description	Unit	Value (2001)	Value (2011)
Population	Million Nos.	3.5	5.6
Households	Nos.	5,52,164	12,65,372
Area	Sq.km	190	466
Density	persons/ sq.km	18240	12031
Zones	Nos.	5	6
Wards	Nos.	44	64

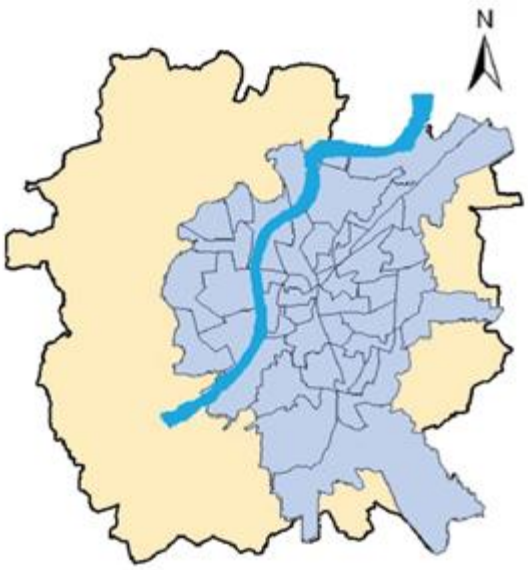

(Figure 3.3.1 AMC city profile)

The Ahmadabad municipal corporation water supply network configuration for these 6 million people are as follows-

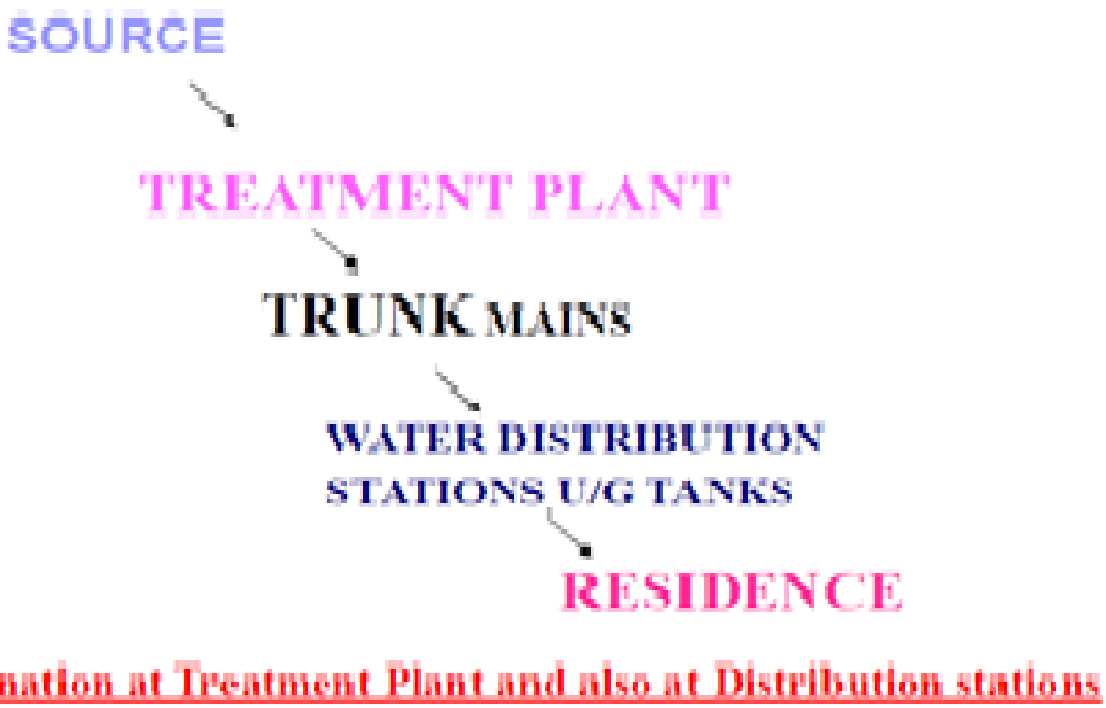

(Figure 3.3.2 Method of Water Distribution)

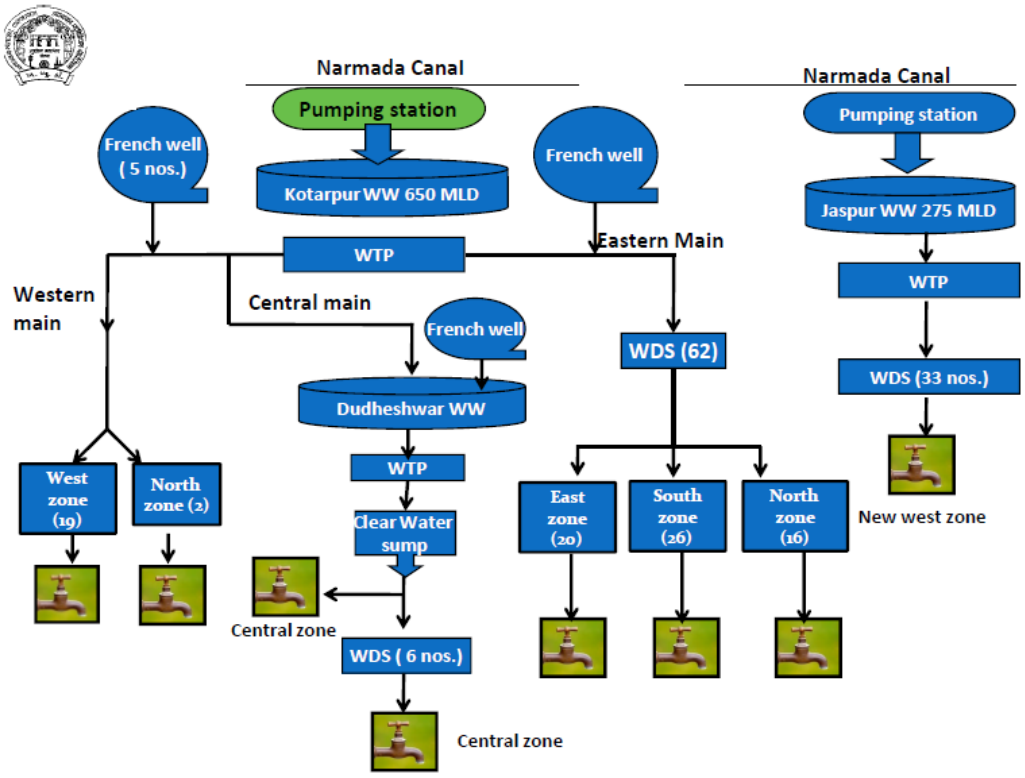

(Figure 3.3.3 Block diagram of Ahmadabad Water Distribution System)

Ahmedabad Municipal Corporation

▪ Water Supply	1030 MLD
▪ Sewerage Received	700 MLD
▪ Water Treatment Plants	4
▪ Water Distribution Stations	141
▪ Sewage Treatment Plants	9
▪ Sewage Pumping Stations	44
▪ Total Road Length	2363 Km.
▪ Water Distribution Network	3730 Km.
▪ Sewerage Network	1921 Km.
▪ Daily lifting of Solid Waste	3600 MT
▪ Population coverage:	
▫ Water supply	90%
▫ Drainage	85%

(Figure 3.3.4 AMC's Water Management)

The water taken from source (river or lake) goes next into the treatment plant, in the treatment plant chlorination of water occurs and all disinfectants are removed. Now the cleans water is pumped into trunks mains where it is stored and then then the trunk water is to theto the primary distribution station from where it is supplied tothe residence. Primary

In the distribution network kotarpur and jaspur is the main distribution network area.

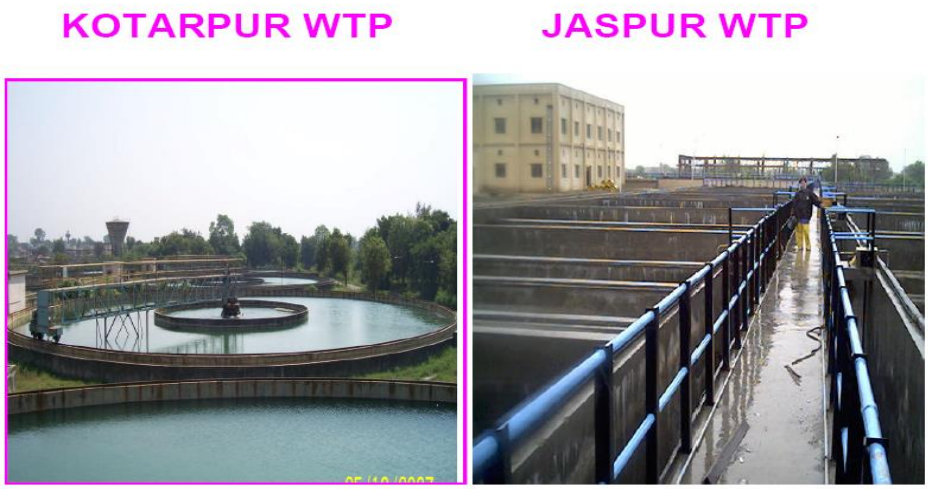

(Figure 3.3.5 Water Treatment Plant)

Chapter 4
Problem Definition and Remedies

4.1. Introduction

This chapter gives an overview about the problems faced by the users in the Traditional Water Distribution System in detailed explanation.

Here the Automated Water Distribution System applied by us will not only solve the problem but also takes it to a new level.

4.2 Problem and its Remedies

Traditional water distribution system has many flaws these are:

1. **High rate of wastage of water:**

The earlier water distribution system consists of many flaws, the most commonly occurring fault is wastage of high amount of water, it is a prediction that the next world war will going to be the war of water.

As India being world second most populous country the per unit water availability is very low, as availability of water is an important need for the common man for his day to day life. So we must take adequate step to save water. As without water everything is not fissible.

REMEDIES:

By our research we will reduce the wastage of water and even increases the reliability in the automatic water distribution system by keeping an eye on distribution of water, making system reliable and efficient by reducing wastage of water. The system used microcontroller to automate the process of water pumping in an overhead tank storage system and has ability to detect the level of water in a tank.

2. **Time consuming:**

The ancient way of water distribution system takes a huge amount of time in distribution of water in previous method person in charge will go to that place and open the valve for a

particular time period. Once the time over again the in charge person will go to the same place and close the valve. It is wastage of time and manpower.

REMEDIES:

As the distribution is controller based as a result the operation is done using advance technologies. So the full system is under surveillance at the control room making the distribution system works under defined time reducing the extra time consumption during opening of valve manually and other reasons. . The proposed system is fully automated. Here human work and time is reduced.

3. **Water Theft or Water Efficiency:**

There are incidents of access drawing by certain customers by connecting motor pumps sets to the water line which is considered as water theft.

In the previous water distribution system the theft of water is an important problem. Due to theft there is an unequal distribution of water, to houses, to irrigation fields and many more. The theft also reduces the efficiency of water.

Due to water theft and low water efficiency:

- Decreasing quality and availability of source waters,
- Increasing costs in treatment and providing fresh water,
- Aging of infrastructure for service beyond its useful life,
- Growing demands in the improved level of service placed on the system by customers,
- Reducing or delaying the need in expensive capital projects, and
- Important environment based sustainability benefits, including reduced energy usage and reduced pressure on water resources.

REMEDIES:

The proposed automated sectorial defined water distribution system reduces the water theft efficiently and increases the water efficiency.

The system monitors water theft very closely and eliminate the possibility of theft by placing water meters in the distribution system.

Managing water pressure is another way that systems can manage water losses and improve water efficiency. Pressure differences may occur across a system for many reasons; the simple reason is in elevation between water sources and end users.

Reducing excess pressure can:

- Reduce the volume of leaks in system and decreases flow through open taps or faucets.
- Limit future losses by reducing stress on pipes and joints, even limiting the risk of new leaks.

Chapter 5
Components of Automatic Water Distribution System

5.1 Introduction:

The growth of residential areas and industrial areas in great extent requires the increase in water supply facility with performance monitoring system. The use of ½ HP to 1 HP pump to extract water directly by connecting the tap supplied to each house results into the unbalanced distribution of water. Also the water thefts through any water channel are increased now days. The proposed system gives the automatic implantation in water supply control and anti-theft technology for drinking water supply.

The various components used to obtain satisfactory distribution of water in the automated water distribution system are:

1. Water Pump
2. Microcontroller
3. Driver IC
4. Level Sensor
5. LED
6. Water Meter
7. Soleniod Valve

5.2. Water Pump

Pump is a device that moves fluid(liquid/gases) by mechanical action. Pumps can be classified into 3 major groups according to the method they use to move fluid:

1. Direct lift
2. Displacement
3. Gravity pumps

Pumps operate by some mechanism (typically reciprocating or rotary), and consume energy to perform mechanical work by moving the fluid. Pumps operate via many energy sources, including manual operation, electricity, engines, or wind power, come in many sizes, from microscopic for use in medical applications to large industrial pumps.

Mechanical pumps serve in a wide range of applications such as pumping water from wells, aquarium filtering, pond filtering and aeration, in the car industry for water-cooling and fuel injection, in the energy industry for pumping oil and natural gas or for operating cooling towers. In the medical industry, pumps are used for biochemical processes in developing and manufacturing medicine, and as artificial replacements for body parts, in particular the artificial heart and penile prosthesis.

Pumps can be classified by their method of displacement into positive displacement pumps, impulse pumps, velocity pumps, gravity pumps, steam pumps and valve less pumps

There are two basic types of pumps

1. Positive displacement pumps
2. Centrifugal pumps

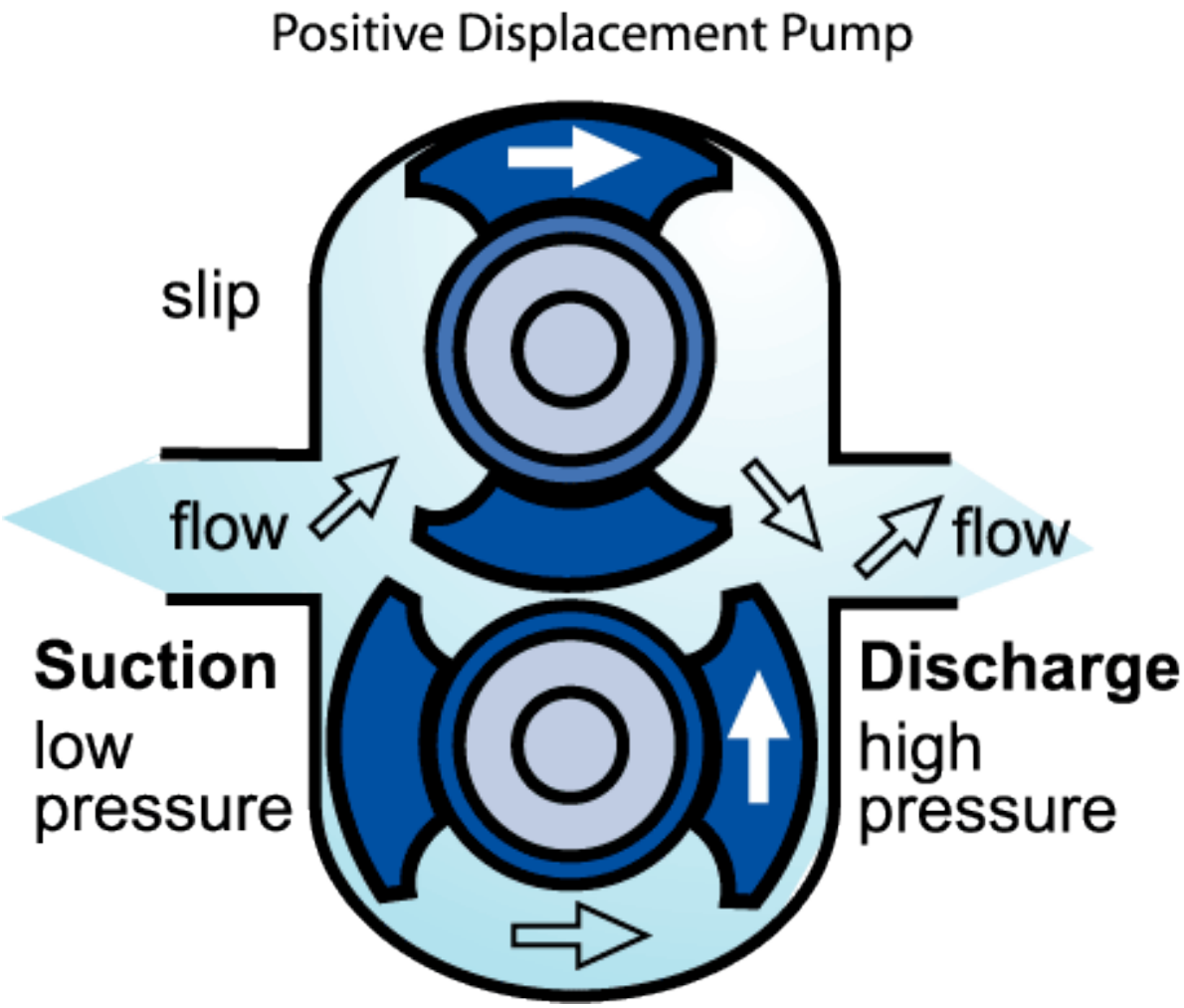

(figure 5.2.1.1 Positive Displacement Pump)

This positive displacement pump makes the fluid movement by trapping a fixed amount and forcing that trapped volume into the discharge pipe.

Some positive displacement pumps use an expanding cavity on the suction side and a decreasing cavity on the discharge side. Liquid flows in the pump as the cavity on the suction side expands. The liquid flows out of the discharge as the cavity collapses. The volume is constant through each cycle of operation.

5.2.1 Positive displacement pump behavior and safety

Positive displacement pumps unlike centrifugal, theoretically can produce the same flow at a given speed (RPM) no matter what the discharge pressure. Hence, positive displacement pumps are constant flow machines. However, a slight increase in internal leakage as the pressure increases prevents a truly constant flow rate.

A positive displacement pump must not operate against a closed valve on the discharge side of the pump, because it has no shutoff head like centrifugal pumps. A positive displacement pump operating against a closed discharge valve continues to produce flow and the pressure in the discharge line increases until the line bursts, the pump is severely damaged, or both.

A relief or safety valve on the discharge side of the positive displacement pump is therefore necessary. The relief valve can be internal or external. The pump manufacturer normally has the option to supply internal relief or safety valves. The internal valve is usually only used as a safety precaution. An external relief valve in the discharge line, with a return line back to the suction line or supply tank provides increased safety.

A positive displacement pump consists of many types:

1. Rotatory lobe pumps
2. Progressive cavity pumps
3. Piston pumps
4. Screw pumps
5. Gear
6. Hydraulic

Hydraulic Pumps:

They are used in hydraulic drive system and it can be hydrostatic or hydrodynamic. A hydraulic pump is just a mechanical source of power tht converts mechanical power into hydraulic energy i.e flow pressure.

When an hydraulic pump operates it creates a vacuum at the pump inlet which forces liquid from the reservoir into the inlet line to the pump and by mechanical action delivers this liquid to the pump outlet and forces it into the hydraulic system.

Hydrostatic pumps are positive displacement pumps while hydrodynamic pumps can be fixed displacement pumps in which the displacement can't be adjusted.

Hydrostatic Pumps:

Hydrostatic pumps are of various types and principally works on Pascal law " The increased in pressure at one point of the enclosed liquid in equilibrium of rest is transmitted equally to all other points of the liquid, unless the effect of gravity is neglected."

5.2.2 Pumps for open and closed systems

Most pumps are working in open system. Pump draws oil from a reservoir at atmospheric pressure. A very important note that there is no cavitation at the suction side of the pump. For this reason the connection of the suction side of the pump is larger in diameter than the connection of the pressure side. In case of the use of multi-pump assemblies, the suction connection of the pump is often combined. It is preferred to have free flow to the pump (pressure at inlet of pump ~ 0.8 bars). The body of the pump is often in open connection with the suction side of the pump.

In case of a closed system, both sides of the pump can be at high pressure. The reservoir is often pressurized with 6-20 bars boost pressure. For closed loop systems, normally axial piston pumps are used. Because both sides are pressurized, the body of the pump needs a separate leakage connection.

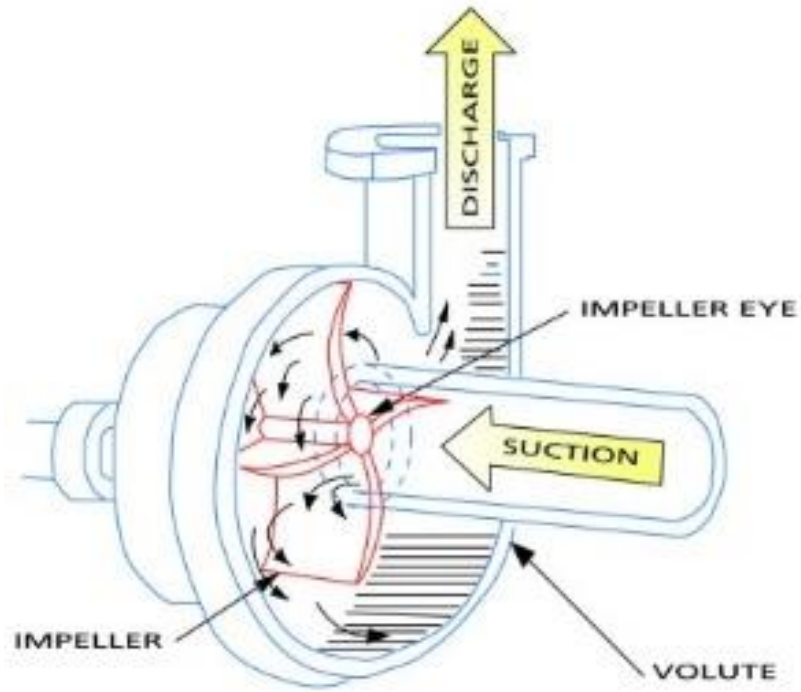

Applications :

Pumps are used throughout society for a variety of purposes. Early applications includes the use of the windmill or watermill to pump water. Today, the pump is used for irrigation, water supply, gasoline supply, air conditioning systems, refrigeration (usually called a compressor), chemical movement, sewage movement, flood control, marine services, etc.

Because of the wide variety of applications, pumps have a plethora of shapes and sizes: from very large to very small, from handling gas to handling liquid, from high pressure to low pressure, and from high volume to low volume.

5.3 Microcontroller

Arduinu Board

The first Arduino was introduced in 2005, whose aiming is to provide a low cost, easy way for novices and professionals to create devices that interact with their environment using sensors and actuators.

An Arduino board historically consists of an Atmel 8, 16 or 32-bit AVR microcontroller (although since 2015 other makers' microcontrollers have been used) with complementary components that facilitate programming and incorporation into other circuits.

when using the Arduino integrated development environment, all boards are programmed over a serial connection. Its implementation varies with the hardware version. Arduino is an open-source prototyping platform based on easy-to-use hardware and software. Arduino boards are able to read inputs - light on a sensor, a finger on a button, or a Twitter message - and turn it into an output - activating a motor, turning on an LED, publishing something online. You can tell your board what to do by sending a set of instructions to the microcontroller on the board. To do so you use the Arduino programming language (based on Wiring), and the Arduino Software (IDE), based on Processing.

Over the years Arduino has been the brain of thousands of projects, from everyday objects to complex scientific instruments. A worldwide community of makers - students, hobbyists, artists, programmers, and professionals - has gathered around this open-source platform, their contributions have added up to an incredible amount of accessible knowledge that can be of great help to novices and experts alike.

5.3.1 Why Arduino?

Thanks to its simple and accessible user experience, Arduino has been used in thousands of different projects and applications. The Arduino software is easy-to-use for beginners, yet flexible enough for advanced users. It runs on Mac, Windows, and Linux. Teachers and students use it to build low cost scientific instruments, to prove chemistry and physics principles, or to get started with programming and robotics. Designers and architects build interactive prototypes, musicians and artists use it for installations and to experiment with new musical instrument.

Pin diagram

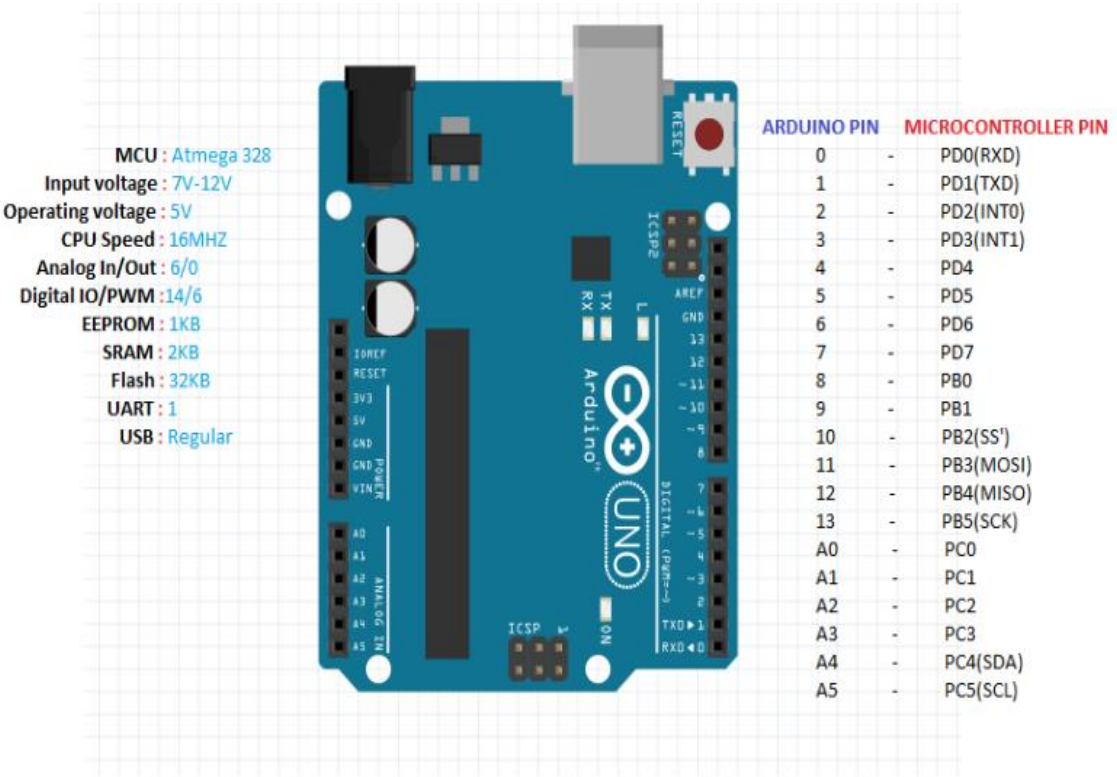

(figure 5.3.1.1 Arduino Uno Board)

5.3.2. What Is Inside an Arduino?

Although there are many different types of Arduino boards available, this manual focuses on the Arduino Uno. This is the most popular Arduino board around. So what makes this thing tick? Here are the specifications:

- Processor: 16 Mhz ATmega328
- Flash memory: 32 KB
- Ram: 2kb
- Operating Voltage: 5V
- Input Voltage: 7-12 V
- Number of analog inputs: 6
- Number of digital I/O: 14 (6 of them PWM)

The specs may seem meager compared to your desktop computer, but remember that the Arduino is an embedded device. We have a lot less to process than your desktop.

Another wonderful feature of the Arduino is the ability to use what are called “Shields”. Although we will not be covering shields in this manual, an Arduino shield will give you crazy functionality like you wouldn’t believe.

5.3.3 Overview:

Arduino Uno is a microcontroller board based in the Atmega 328 . it specifically have 14 digital input and output pins (of which 6 can be used as PWM output), 6 analog inputs and a 16 MHz ceramic resonator, a USB connection, a power jack and icsp header and a reset button. It containts everything need to support the microcontroller. It simply connect to the computer with a USB cable or power it with a AC-DC adapter or battery to get started.

Power

The Arduino Uno can be powered via the USB connection or with an external power supply. The power source is selected automatically. External (non-USB) power can come either from an AC-to-DC adapter (wall-wart) or battery. The adapter can be connected by plugging a 2.1mm center-positive plug into the board's power jack. Leads from a battery can be inserted in the Gnd and Vin pin headers of the POWER connector. The board can operate on an external supply of 6 to 20 volts. If supplied with less than 7V, however, the 5V pin may supply less than five volts and the board may be unstable. If using more than 12V, the voltage regulator may overheat and damage the board. The recommended range is 7 to 12 volts. The power pins are as follows:

- VIN. The input voltage to the Arduino board when it's using an external power source (as opposed to 5 volts from the USB connection or other regulated power source). You can supply voltage through this pin, or, if supplying voltage via the power jack, access it through this pin.
- 5V.This pin outputs a regulated 5V from the regulator on the board. The board can be supplied with power either from the DC power jack (7 - 12V), the USB connector (5V), or the VIN pin of the board (7-12V). Supplying voltage via the 5V or 3.3V pins bypasses the regulator, and can damage your board. We don't advise it.

- 3V3. A 3.3 volt supply generated by the on-board regulator. Maximum current draw is 50 mA.
- GND. Ground pins.

5.3.4 Atmega 328

The atmel 328 The **ATmega328** is a single chip micro-controller created by Atmel and belongs to the megaAVR series.

Memory

The ATmega328 has 32 KB (with 0.5 KB used for the bootloader). It also has 2 KB of SRAM and 1 KB of EEPROM (which can be read and written with the EEPROM library).

Input and Output

Each of the 14 digital pins on the Uno can be used as an input or output, using pinMode(), digitalWrite(), and digitalRead() functions. They operate at 5 volts. Each pin can provide or receive a maximum of 40 mA and has an internal pull-up resistor (disconnected by default) of 20-50 kOhms. In addition, some pins have specialized functions:

- Serial: 0 (RX) and 1 (TX). Used to receive (RX) and transmit (TX) TTL serial data. These pins are connected to the corresponding pins of the ATmega8U2 USB-to-TTL Serial chip.
- External Interrupts: 2 and 3. These pins can be configured to trigger an interrupt on a low value, a rising or falling edge, or a change in value. See the attachInterrupt() function for details.
- PWM: 3, 5, 6, 9, 10, and 11. Provide 8-bit PWM output with the analogWrite() function.
- SPI: 10 (SS), 11 (MOSI), 12 (MISO), 13 (SCK). These pins support SPI communication using the SPI library.
- LED: 13. There is a built-in LED connected to digital pin 13. When the pin is HIGH value, the LED is on, when the pin is LOW, it's off.

The Uno has 6 analog inputs, labeled A0 through A5, each of which provide 10 bits of resolution (i.e. 1024 different values). By default they measure from ground to 5 volts,

though is it possible to change the upper end of their range using the AREF pin and the analogReference() function. Additionally, some pins have specialized functionality:

- TWI: A4 or SDA pin and A5 or SCL pin. Support TWI communication using the Wire library.

There are a couple of other pins on the board:

- AREF. Reference voltage for the analog inputs. Used with analogReference().
- Reset. Bring this line LOW to reset the microcontroller. Typically used to add a reset button to shields which block the one on the board.

See also the mapping between Arduino pins and ATmega328 ports. The mapping for the Atmega328.

PIN DIAGRAM

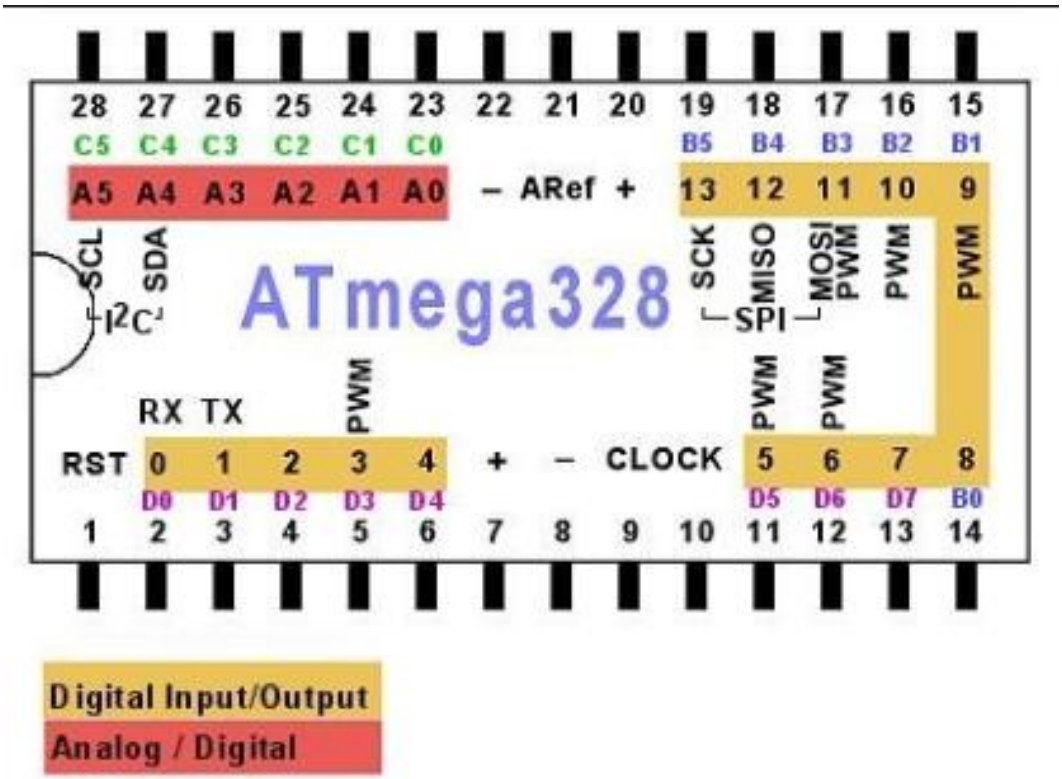

(figure 5.4.3.1 atmega 328 pin diagram)

Pin description:

1. Pin 1 (RESET):

This pin is widely used to RESET the microcontroller

2. Pin (2-6):

From pin 2- pin 6 the microcontroller is used for digital data processing. Here constant data transmission takes place

These pins can widely sub categorized into

Pin 2- digital pin 0 - Rx

Pin 3- digital pin 1 – Tx

Pin 4 – digital pin 2

Pin 5- digital pin 3 – PWM

Pin 6- digital pin 4-

3. Pin 7 (Vcc):
   Supply is given to this pin
4. Pin 8 (GND):
5. Pin 9- pin 10
   Crystal frequency are given to these pins
6. Pin 11-19 (digital pins)
   Among these pins pin 11, pin 12, pin 15,pin 16,pin 17 are used for PWM
7. Pin 20 (Vcc)
   Input supply is given to this pin
8. Pin 21
   Input analog reference voltage is given to this pin
9. Pin 22 (GND)
10. Pin23-28 (analog inputs)
    These all pins are used for analog input processes .

5.4. Motor Drivers

The stepper motor drive receive low level signal from the control circuit and convert the low level signal into electrical pulses to run the motor. One step pulse may be required for the every step of motor shaft.

In full step mode with a standard 200 motor 200 step pulse required to complete one revolution in micro stepping mode the driver may be required to generate 50,000 or more step pulse per revolution.

Speed and torque performance of stepper motor is based on flow of current from driver to motor winding .The lower inductance the faster the current

5.4.1 Operation of Drives:

Stepper motor is driven from a low voltage dc source. The dc power supply to drive circuit should be as much free from harmonics as is possible.

For optimization torque output from stepper motor, the drive circuit should have following feature -

- **a-** During on the current in the phase winding should rise from zero to desired level in short duration
- **b-** During turn off the current in phase winding should be forced to 0 in short duration.

There are three basic types of drive:

1- Unipolar drive
2- Bipolar drive
3- Variable reluctance drive

5.4.2 L293D :

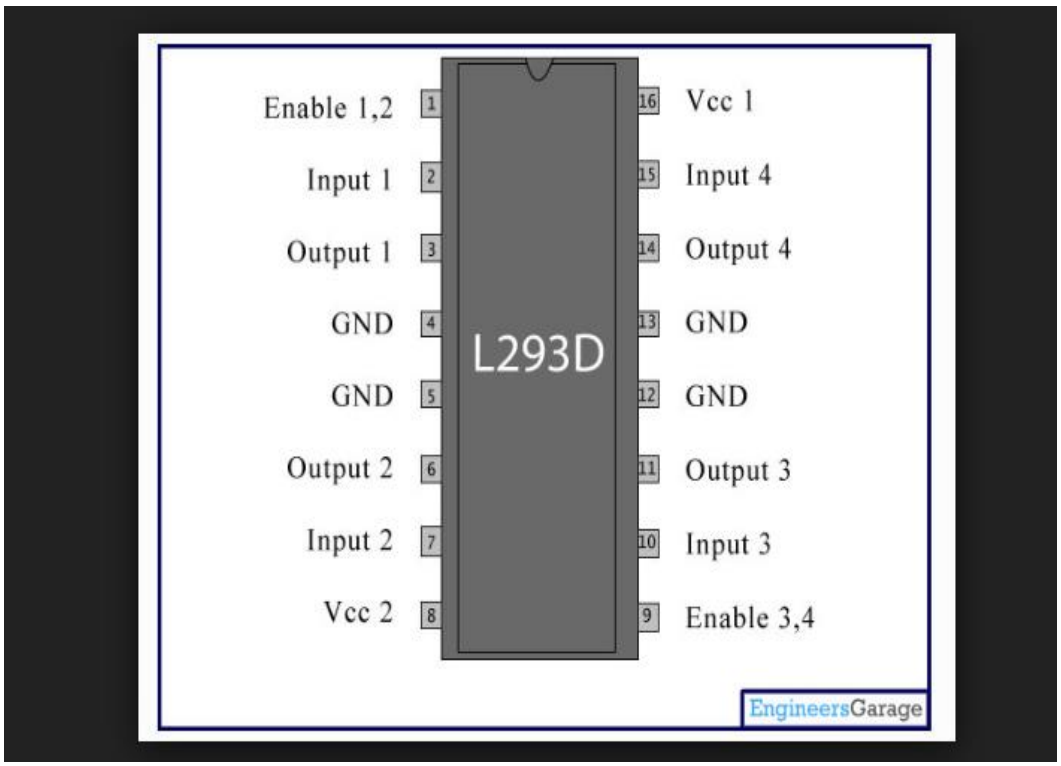

(figure 5.4.1.1 L293D pin structure)

L293D is dual H bridge motor driver integrated circuit. Motor driver act as a current amplifier since they take a low current control signal and provide a high current signal. This high current signal is used to drive the motors.
L293D contains two H-bridge driver circuit in its common mode of operation, two DC motor can be driven simultaneously, both in forward and reverse direction. The motor operations of two motors can be controlled by input logic at pins 2 & 7 and 10 & 15. Input logic 00 or 11 will stop the corresponding motor. Logic 01 and 10 will rotate it in clockwise and anticlockwise directions, respectively.

Enable pins 1 and 9 (corresponding to the two motors) must be high for motors to start operating. When an enable input is high, the associated driver gets enabled. As a result, the outputs become active and work in phase with their inputs. Similarly, when the enable input is low, that driver is disabled, and their outputs are off and in the high-impedance state

5.4.3 Working of L293D

There are two drive pins on L293D. Pin 1 (left H-bridge) and pin 9 (right H-bridge). To turn ON the corresponding motor, pin 1 or 9 need to be set to HIGH. If either pin 1 or pin 9 goes low then the motor in the corresponding section will go OFF (high impedance). These inputs (1 and 9) are the ones that should be used to control motor START/STOP and motor speed under PWM, since there would be high impedance output during low semiperiod of PWM, it would not provoke overload of the L293D when the motor is turning. Thus, PWM or motor ON/OFF control should never be input to pins 2, 7, 15, 10, which should only be used to control direction (Clockwise - CounterClockwise).

The direction-defining four Input pins for the L293D are pin 2 and 7 on the left and pin 15 and 10 on the right as shown on the pin diagram. Left input pins will determine the rotation of motor connected on the left side and right input for motor on the right hand side. The motors are rotated on the basis of the inputs provided at the input pins as LOGIC 1 or LOGIC 0.

5.4.4 L293D Logic Table

Assuming a motor connected on left side output pins (pin 3,6).

- Pin 2 = Logic 1 and Pin 7 = Logic 0 | Clockwise Direction
- Pin 2 = Logic 0 and Pin 7 = Logic 1 | Anticlockwise Direction
- Pin 2 = Logic 0 and Pin 7 = Logic 0 | Brake (this is not high impedance) (force stop rotation using electric brake = same voltage both pins of the motor = overload while the motor is still running)
- Pin 2 = Logic 1 and Pin 7 = Logic 1 | Brake (this is not high impedance) (force stop rotation using electric brake = same voltage both pins of the motor = overload while the motor is still running)

Pin No	Function	Name
1	Enable pin for Motor 1; active high	Enable 1,2
2	Input 1 for Motor 1	Input 1
3	Output 1 for Motor 1	Output 1
4	Ground (0V)	Ground
5	Ground (0V)	Ground
6	Output 2 for Motor 1	Output 2
7	Input 2 for Motor 1	Input 2
8	Supply voltage for Motors; 9-12V (up to 36V)	Vcc 2
9	Enable pin for Motor 2; active high	Enable 3,4
10	Input 1 for Motor 1	Input 3
11	Output 1 for Motor 1	Output 3
12	Ground (0V)	Ground
13	Ground (0V)	Ground
14	Output 2 for Motor 1	Output 4
15	Input2 for Motor 1	Input 4
16	Supply voltage; 5V (up to 36V)	Vcc 1

(figure 5.4.4.1 Function Structure)

5.5 Water Level Indicator:

Water level indication may be defined as a system by which we can get the information of any water reservoir. The level indicator system are quite useful to reduce the wastage of water may be defined as a system by which we can get the information of any water reservoir.

The level indicator system is quite useful to reduce the wastage of water from any reservoir.

5.5.1 Level sensor:

Level sensors have been a part of manufacturing processes for several decades, in industries as. Diverse as food and beverage, semiconductors, and pharmaceutical However, equipment manufacturers and users may be surprised at both the breadth and sophistication of level sensing alternatives currently available.

5.5.2 Types of Level Measurement Sensors.

Various systems in sensors developments have been introduced to assist in crucial measurements of level. There are many physical and application variables that affect the selection of the optimal level monitoring solution for industrial and / or commercial processes. Selection is categorized to contact and non-contact sensor. The selection criteria include the physical: state (liquid, solid or slurry), temperature, pressure or vacuum, chemistry, dielectric constant of medium, density or specific gravity of medium, agitation, acoustical or electrical noise, vibration, mechanical shock, tank or bin size and shape; and the application constraints: price, accuracy, appearance, response rate, ease of calibration or programming, physical size and mounting of the instrument, monitoring or control of continuous or discrete (point) levels.

The selection criteria selected in this project is non-contact point level detection or continuous monitoring of solids and liquids. The sensor types to assist in this particular criterion are as follows:

i. Capacitance level sensor (also called RF):

Possible when the tank wall are metal, to use a single bare or insulted rod as one capacitor plate and the tank walls as the other. An interesting application of this type of capacitance probe is in aircraft fuel quantity indicators. Capacitance switches can be utilized to provide non-contact point measurements of liquid level.

ii. Ultrasound:

Ultrasound echo ranging transducers can be used in either wetted (contact) or non-wetted (non-contact) configurations for continuous measurements of liquid level. An interesting application of wetted transducers is as depth finders and fish finders for ships and boats. Non wetted transducers can also be used with bulk materials such as grains and powders.

iii. Radar:

Microwave sensors are ideal for use in moist, vaporous, and dusty environments as well as in applications in which temperatures vary. Microwaves (also frequently described as RADAR), will penetrate temperature and vapor layers that may cause problems for other techniques,

such as ultrasonic. Microwaves are electromagnetic energy and therefore do not require air molecules to transmit the energy making them useful in vacuums. Microwaves, as electromagnetic energy, are reflected by objects with high dielectric properties, like metal and Conductive water. Alternately, they are absorbed in various degrees by low dielectric or insulating mediums such as plastics, glass, paper, many powders and food stuffs and other solids. Microwave-based sensors are not affected by fouling of the microwave- transparent glass or plastic window through which the beam is passed nor by high temperature, pressure, or vibration. These sensors do not require physical contact with the process material, so the transmitter and receiver can be mounted a safe distance from the process, yet still respond to the presence or absence of an object.

Microwave transmitters offer the key advantages of ultrasonic: the presence of a microprocessor to process the signal provides numerous monitoring, controls, communications, setup and diagnostic capabilities. Additionally, they solve some of the application limitations of ultrasonic: operation in high pressure and vacuum, high temperatures, dust, temperature and vapor layers. One major disadvantage of microwave or radar techniques for level monitoring is the relatively high price of such sensors.

5.5.3 Level Sensing Technology

To determine the best sensor for a particular application, it's important to first understand what technology options are available, as well as their advantages and limitations. Following are some of today's most frequently used level sensing methods:

1. Laser:

This technology offers the broadest availability of offerings, flexibility, ease of set-up and Alignment, and cost. While lasers work well for bulk and liquid, continuous, and switching Applications, it's not as well-suited for clear materials, foam (light loss due to dispersion), or Sticky fluids (lens contamination).

2. Microwave:

Because of its ability to penetrate temperature and vapor layers that may cause Problems for other techniques, guided microwave technology (also known as guided radar) Compares well with lasers as they don't need calibration and have multiple output options. Guided microwave is also among the handful of technologies that works well with foam and

Sticky materials. However, guided microwave sensors do have a limited detection range in some applications.

3. Tuning Fork:

This vibrating-style sensor technology is ideal for solid and liquid detection, including sticky substances and foam, as well as bulk powders. However, tuning forks are limited to detection applications (i.e., overfill and dry run), and do not provide continuous process measurement. The mounting position of the devices is also critical.

4. Ultrasonic:

These devices, which gauge levels by measuring the duration and intensity of
Echoes from short bursts of energy, share the same capabilities as lasers and offer flexibility in mounting and outputs. The technology is ideal for many types of liquids, but performance drops off in applications involving foam. Range is more limited than laser offerings and alignment of the emitting/detection and reflection components is also critical.

5. Optical Prism.

Inexpensive and simple to set-up and operate, optical sensors detect variations in emitted light. However, optical prisms work only in clean translucent to transparent liquids, while their limited “on/off” functionality also restricts their use to protecting from overflows and Dry runs.

6. Pressure:

Used for a variety of liquids, pressure sensors measure the hydrostatic pressure of
The liquid at the bottom of the tank with respect to atmospheric pressure to determine the level of the liquid. Though highly accurate, pressure sensors’ setup and calibration requirements make them more of a specialty solution in situations where all other options are not viable due to the type of liquid, or configuration of the tank itself. For example, the tank bottom may have a funnel or cone shape, or there may be a motor or agitator positioned in the middle that prevents a straight-down view.

7. Capacitance:

Capacitance level sensors operate with a variety of solids, liquids, and mixed Materials. There are also a wide range of device types, some of which can be attached outside The vessel. Users need to be cautious when selecting a device, as not every capacitance senor Works with every type of material or vessel. In addition, some capacitive probes can give Continuous output much the way guided microwaves or conductive probes do, but need to be Calibrated to the material being measured. And because capacitance probes are a contact-based measurement system, the technology is not always suitable for use with sticky fluids.

8. Floats:

The oldest and simplest measuring technology can still be found in automated manufacturing processes. Being a mechanical device, however, floats offer little other advantage to users for all but the most basic applications.

5.6 SOLENOID VALVE

5.6.1 Introduction

Solenoid is a simple electromagnetic device that converts electrical energy directly into linear mechanical motion. Solenoid valve is a device used for opening and closing the ports and thereby controlling the direction of fluid flow.

A solenoid valve is an electromechanical controlled valve. The valve features a solenoid, which is an electric coil with a movable ferromagnetic core in its centre. This core is called the plunger. In rest position, the plunger closes off a small orifice. An electric current through the coil creates a magnetic field. The magnetic field exerts a force on the plunger. As a result, the plunger is pulled toward the centre of the coil so that the orifice opens. This is the basic principle that is used to open and close solenoid valves.
Notice that the plunger is being held about halfway out of the coil by a spring. When the coil is energized , the resulting magnetic field pulls the plunger to the middle of the coil. The magnetic force is unidirectional — a spring is required to return the plunger to its un energized position.

5.6.2 POWER REQUIREMENTS

We offer solenoids with both AC and DC options. The AC versions plug into a standard wall outlet by attaching a plug. The DC versions require a power supply to operate. Some are 12v DC and some are 24v DC. The 24v DC versions require less amperage to operate than 12v DC.

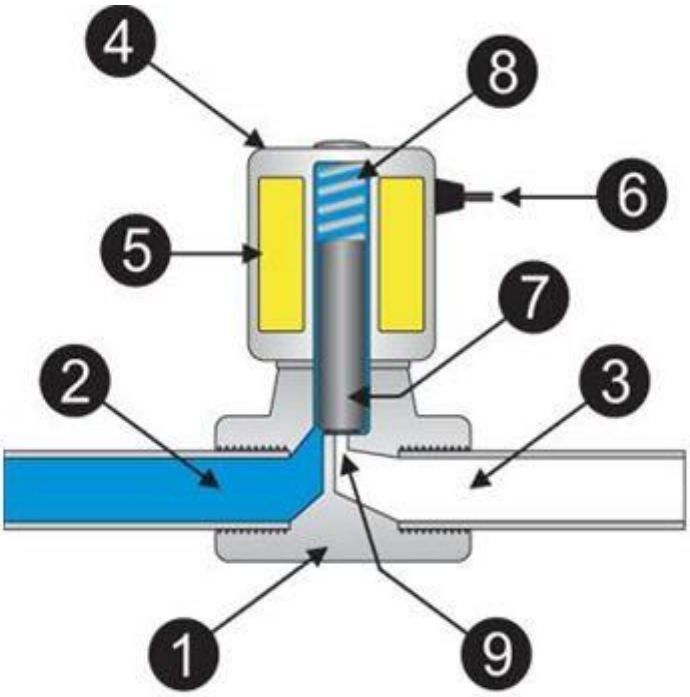

Parts of Solenoid Valve

1) Valve body
2) Inlet port
3) Outlet port
4) Coil / Solenoid
5) Coil winding
6) Lead wires
7) Plunger or piston
8) Spring
9) Orifice

(figure 5.6.2.1 Solenoid Valve)

5.6.3 Working principle of a practical Solenoid valve

A solenoid valve is the combination of a basic solenoid and mechanical valve. So a solenoid valve has two parts namely- Electrical solenoid, mechanical valve.

Solenoid converts electrical energy to mechanical energy and this energy is used to operate a mechanical valve that is to open, close or to adjust in a position.
"A solenoid valve is an electromechanical actuated valve to control the flow of liquids and gases."
Solenoid valves are amongst the most used components in gas and liquid circuits. The number of applications is almost endless. Some examples of the use of solenoid valves include heating systems, compressed air technology, industrial automation, swimming pools, sprinkler systems, washing machines, dental equipment, car wash systems and irrigation systems.

5.6.4 Circuit Functions of Solenoid Valves

Solenoid valves are used to close, dose, distribute or mix the flow of gas or liquid in a pipe. The specific purpose of a solenoid valve is expressed by its circuit function. A 2/2 way valve has two ports (inlet and outlet) and two positions (open or closed). A 2/2 way valve can be 'normally closed' (closed in de-energized state) or 'normally open' (open in de-energized state). A 3/2 way valve has three ports and two positions and can therefore switch between two circuits. 3/2 way valves can have different functions such as normally closed, normally open, diverting or universal. More ports or combinations of valves in a single construction are possible. The circuit function can be expressed in a symbol. Below are some examples of the most common circuit functions. The circuit function of a valve is symbolized in two rectangular boxes for the de-energized state (right side, visualized by) and energized state (left). The arrows in the box show the flow direction between the valve ports. The examples show a 2/2-way Normally Open (NO) valve, a 2/2-way Normally Closed (NC) valve and a 3/2-way Normally Closed valve. For more information about valve symbols and circuit functions, please visit the page about valve symbols.

5.6.5 Type of Operation

Solenoid valves can be categorized into different groups of operation.

- Direct Operated

Direct operated (direct acting) solenoid valves have the most simple working principle. The medium flows through a small orifice which can be closed off by a plunger with a rubber gasket on the bottom. A small spring holds the plunger down to close the valve. The plunger is made of a ferromagnetic material. An electric coil is positioned around the plunger. As soon as the coil is electrical energized, a magnetic field is created which pulls the plunger up towards the centre of the coil. This opens the orifice so that the medium can flow through. This is called a Normally Closed (NC) valve. A Normally Open (NO) valve works the opposite way: it has a different construction so that the orifice is open when the solenoid is not powered. When the solenoid is actuated, the orifice will be closed. The maximum operating pressure and the flow rate are directly related to the orifice diameter and the magnetic force of the solenoid valve. This principle is therefore used for relatively small flow rates. Direct operated solenoid valves require no minimum operating pressure or pressure difference, so they can be used from 0 bar up to the maximum allowable pressure. The displayed solenoid valve is a direct operated, normally closed 2/2 way valve.

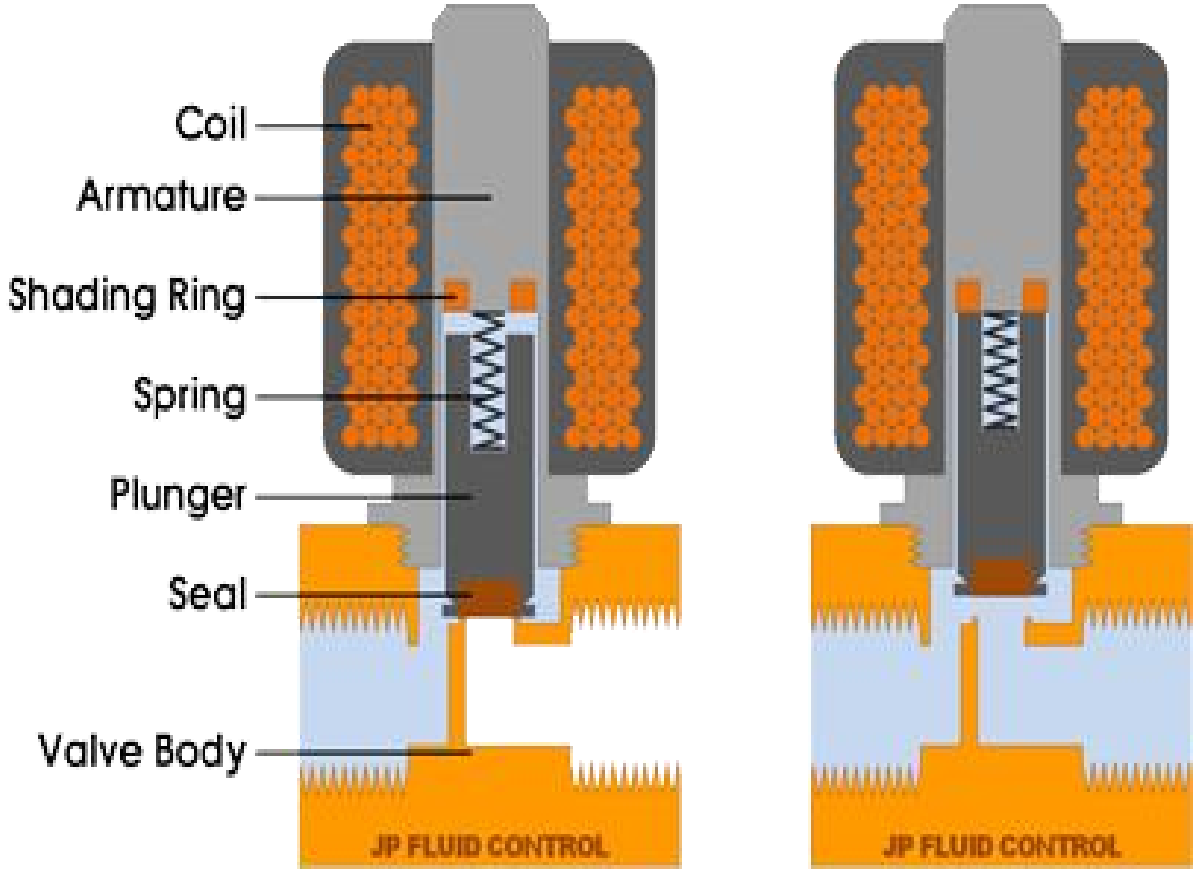

(figure 5.6.5.1 Operation of Solenoid Valve)

- Indirect Operated (Servo Or Pilot Operated)

Indirect operated solenoid valves (also called servo operated, or pilot operated) use the differential pressure of the medium over the valve ports to open and close. Usually these valves need a minimum pressure differential of around 0.5 bar. The inlet and outlet are separated by a rubber membrane, also called diaphragm. The membrane has a small hole so that the medium can flow to the upper compartment. The pressure and supporting spring above the membrane will ensure that the valve remains closed. The chamber above the membrane is connected by a small channel to the low pressure port. This connection is blocked in the closed position by a solenoid. The diameter of this "pilot" orifice is larger than the diameter of the hole in the membrane. When the solenoid is energized, the pilot orifice is opened, which causes the pressure above the membrane to drop. Because of the pressure difference on both sides of the membrane, the membrane will be lifted and the medium can flow from inlet port to outlet port. The extra pressure chamber above the membrane acts like an amplifier, so with a small solenoid still a large flow rate can be controlled. Indirect solenoid valves can be used only for one flow direction. Indirect operated solenoid valves are

used in applications with a sufficient pressure differential and a high desired flow rate, such as for example irrigation systems, showers or car wash systems. Indirect valves are also known as servo controlled valves.

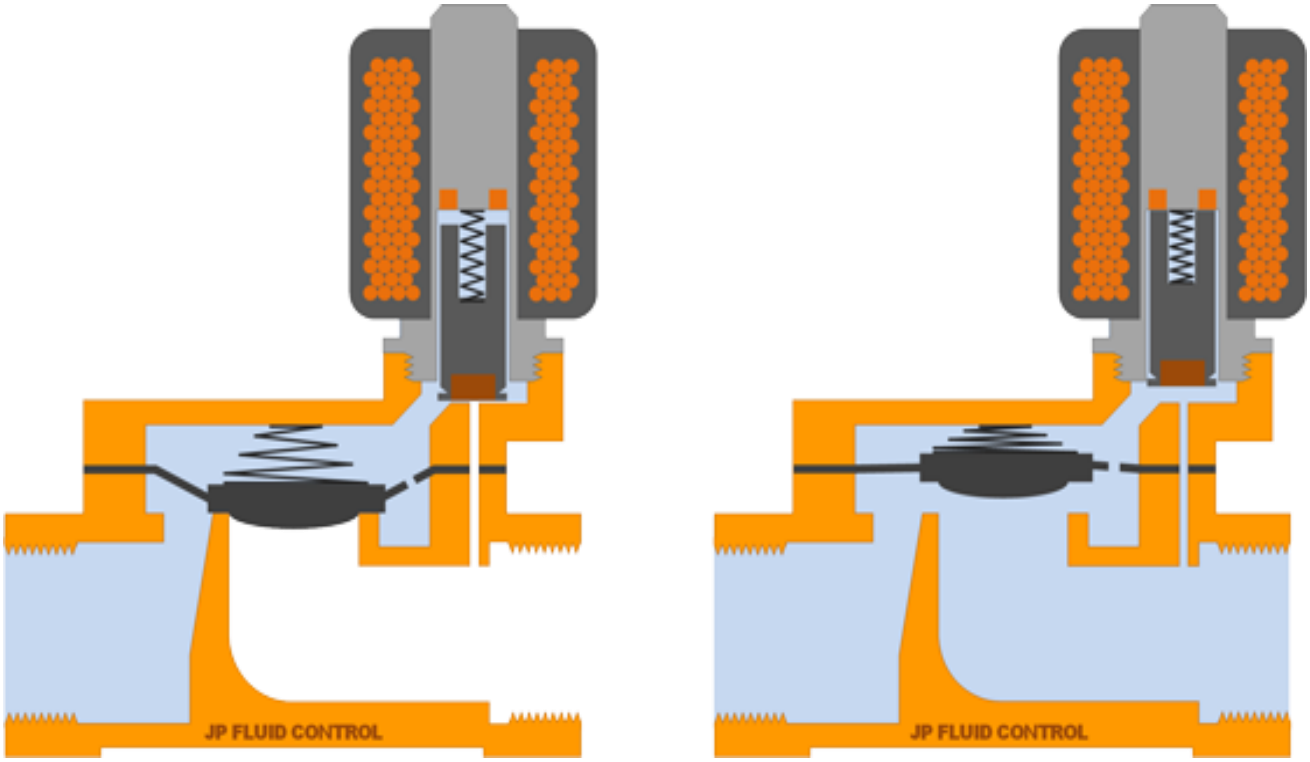

(figure 5.6.5.2 Operation of Solenoid valve)

- Semi-Direct Operated

Semi-direct operated solenoid valves combine the properties of direct and indirect valves. This allows them to work from zero bar, but still they can handle a high flow rate. They look somewhat like indirect valves and also feature a movable membrane with a small orifice and pressure chambers on both sides. The difference is that the solenoid plunger is directly connected to the membrane. When the plunger is lifted, it directly lifts the membrane to open the valve. At the same time, a second orifice is opened by the plunger that has a slightly larger diameter than the first orifice in the membrane. This causes the pressure in the chamber above the membrane to drop. As a result, the membrane is lifted not only by the plunger, but also by the pressure difference. This combination results in a valve that operates from zero bar, and can control relatively large flow rates. Often, semi-direct operated valves have more powerful coils than indirect operated valves. Semi-direct operated valves are sometimes called assisted-lift solenoid valves.

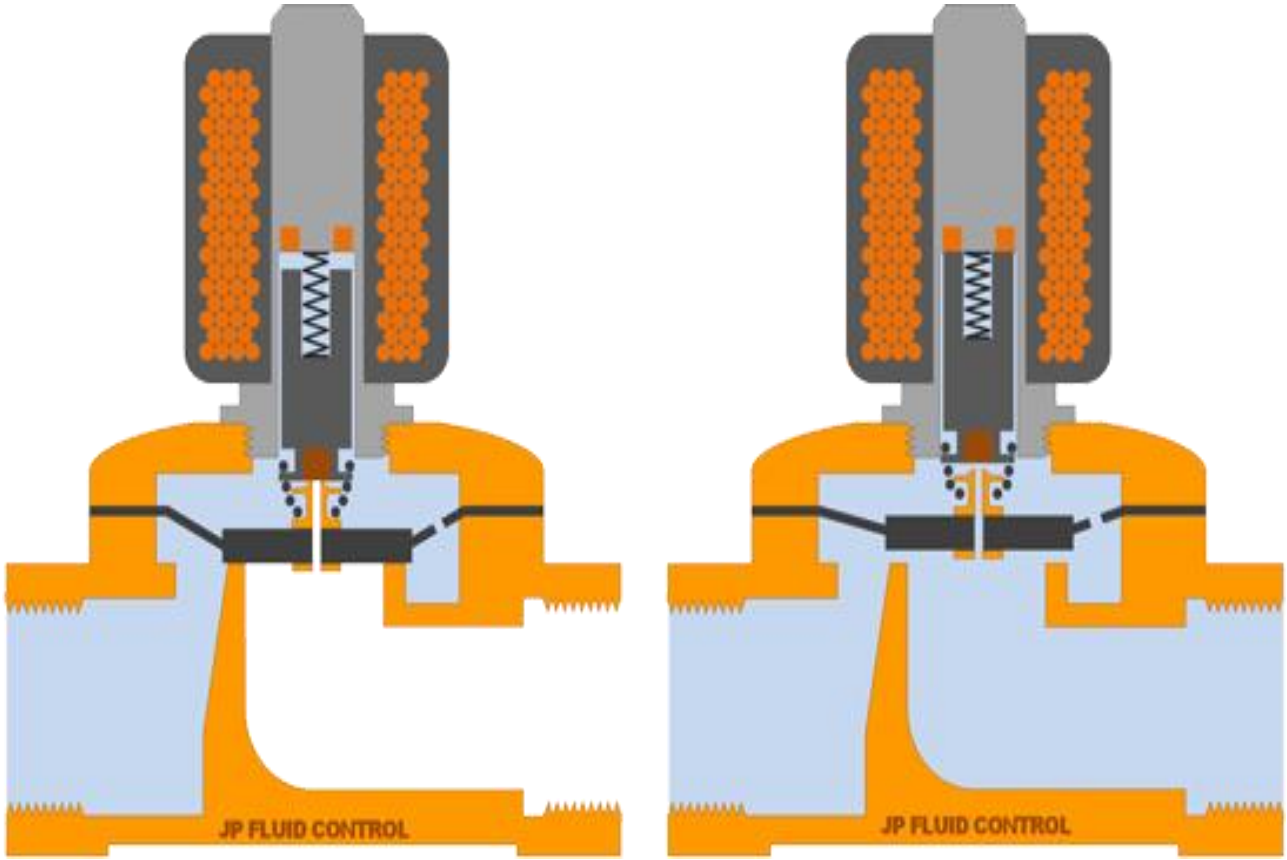

(figure 5.6.5.3 operation of solenoid valve)

5.7. LED

5.7.1 Introduction

In this chapter, we will discuss about importance about light emitting diode (LED). Which is one of the important light sources.

When electrical energy is given to an LED it emits light. LED is a two terminal device, the terminals are:

1. **ANODE (A)**
2. **CATHODE (K)**

Due to anode and cathode, a P-N junction is formed between them. So, basically LED is a P-N junction diode.

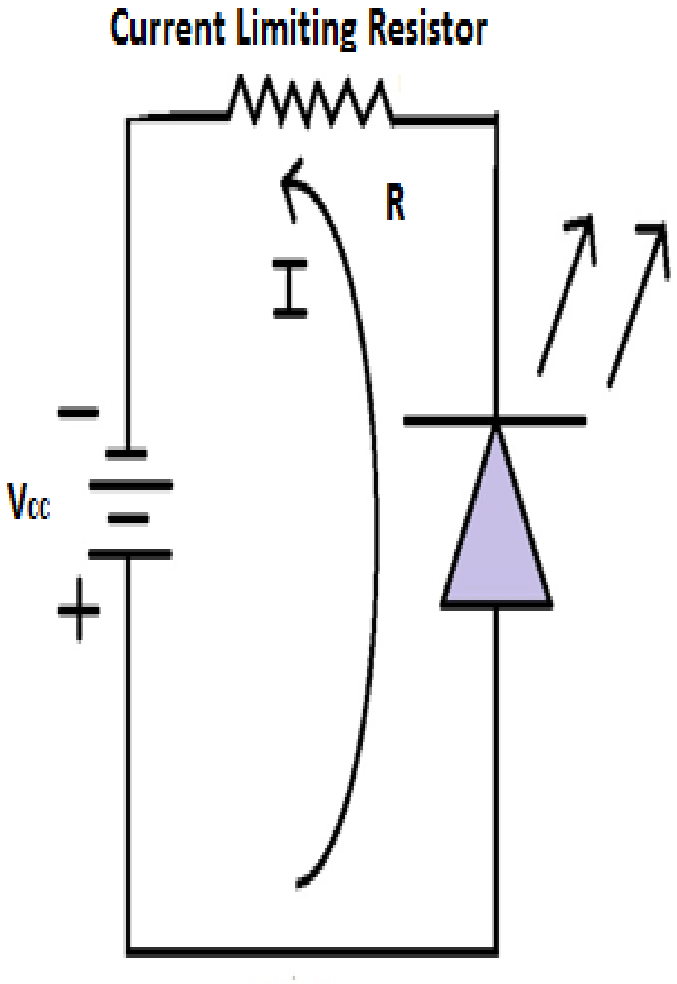

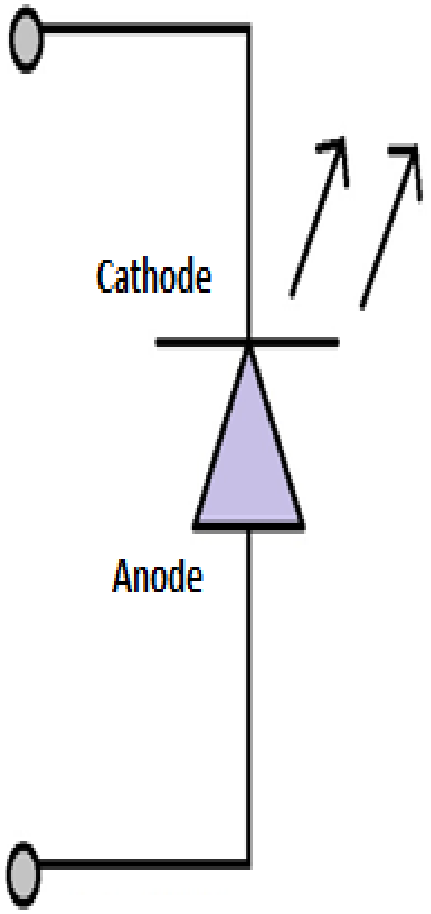

(Figure 5.7.1.1 LED Biasing) **(Figure 5.7.1.2 Symbol of LED)**

For specific operation of an LED, it is necessary to be in forward biased.

LED's are mainly made up of Gallium Arsenide (GaAs), Gallium Arsenide Phosphide (GaAsP) and Gallium Phosphide (GaP).

5.7.2 Construction of LED:

The most popular method of LED construction is to deposit 3 semiconductor layers on the substrate.

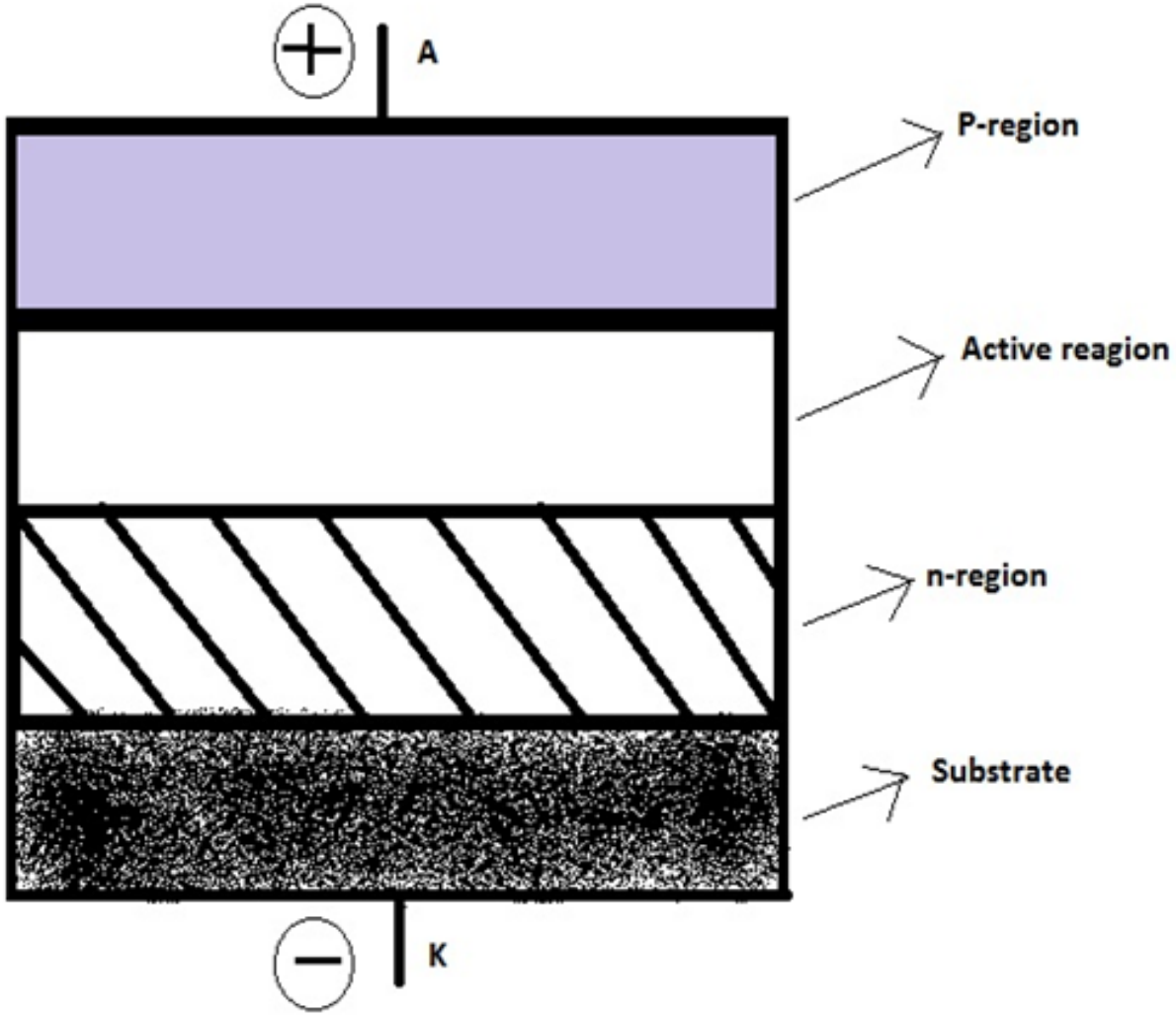

(Figure 5.7.2.1 Construction of LED)

The LED emerges light from active side in all the direction when electron hole pairs recombine as the active region exists between the P-N regions.

The disadvantage of this structure is that the LED emits light in all the direction. This problem can be easily solved by using a reflective cup, and placing the while basic structure of LED inside the cup so that the focus of light is available in the desired direction.

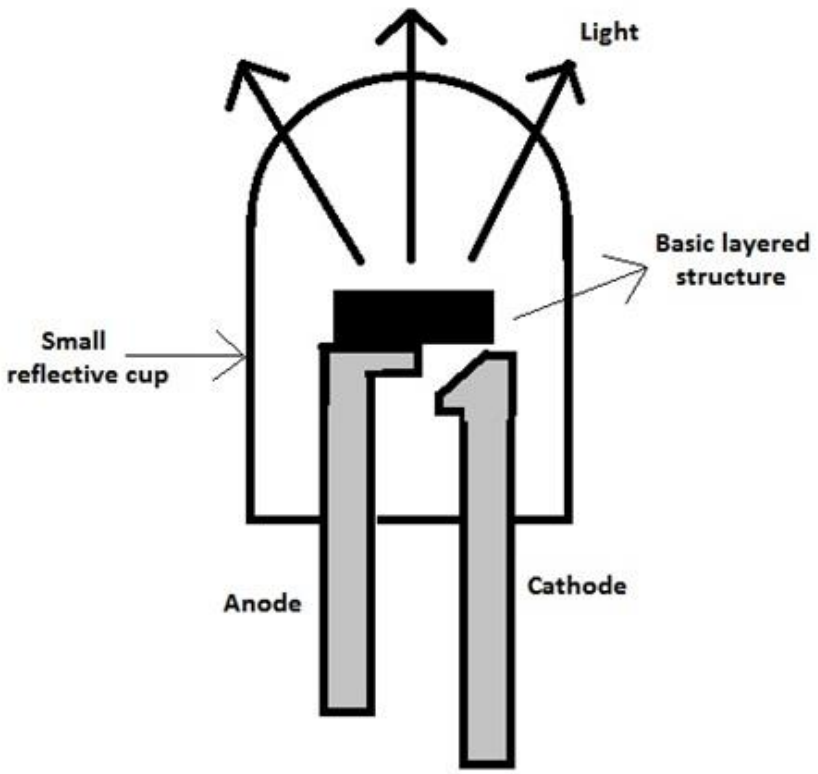

(Figure 5.7.2.2 Cup Type LED Structure)

5.7.3 Operation of LED:

When LED is in forward bias the electron from N region will jump to the P type material and recombine with the holes present in it.

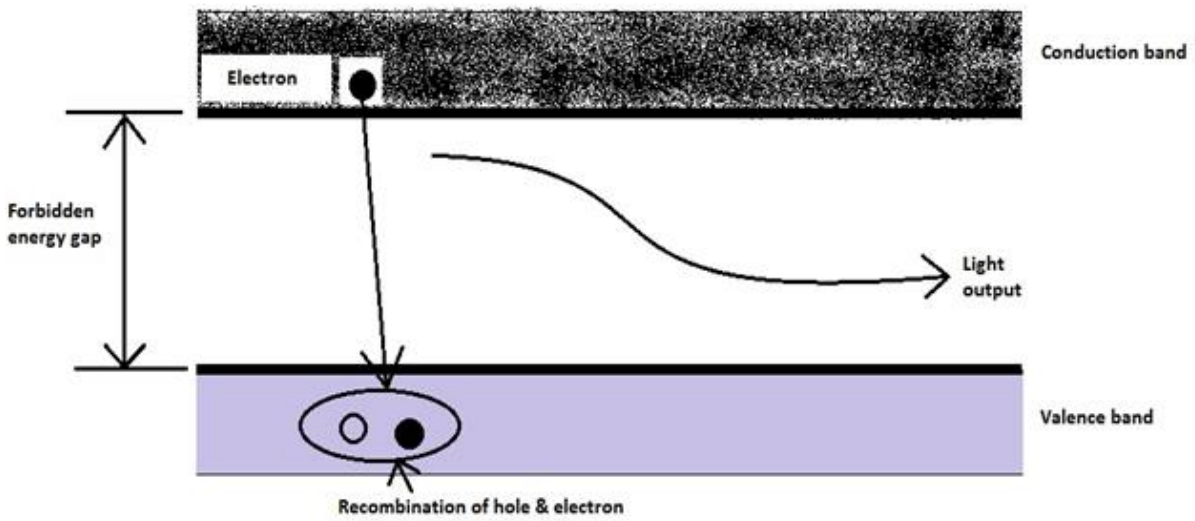

(Figure 5.7.3 Operation of LED)

Due to this recombination the electrons will try to return back to the valance band which is at the lower energy level than the conduction band as this recombination process takes place in the conduction band.

While returning back, the re-combinated electron gives away the excess energy in form of light. This process is called as Electroluminescence in this way an LED emits light.

5.7.4 Output characteristics:

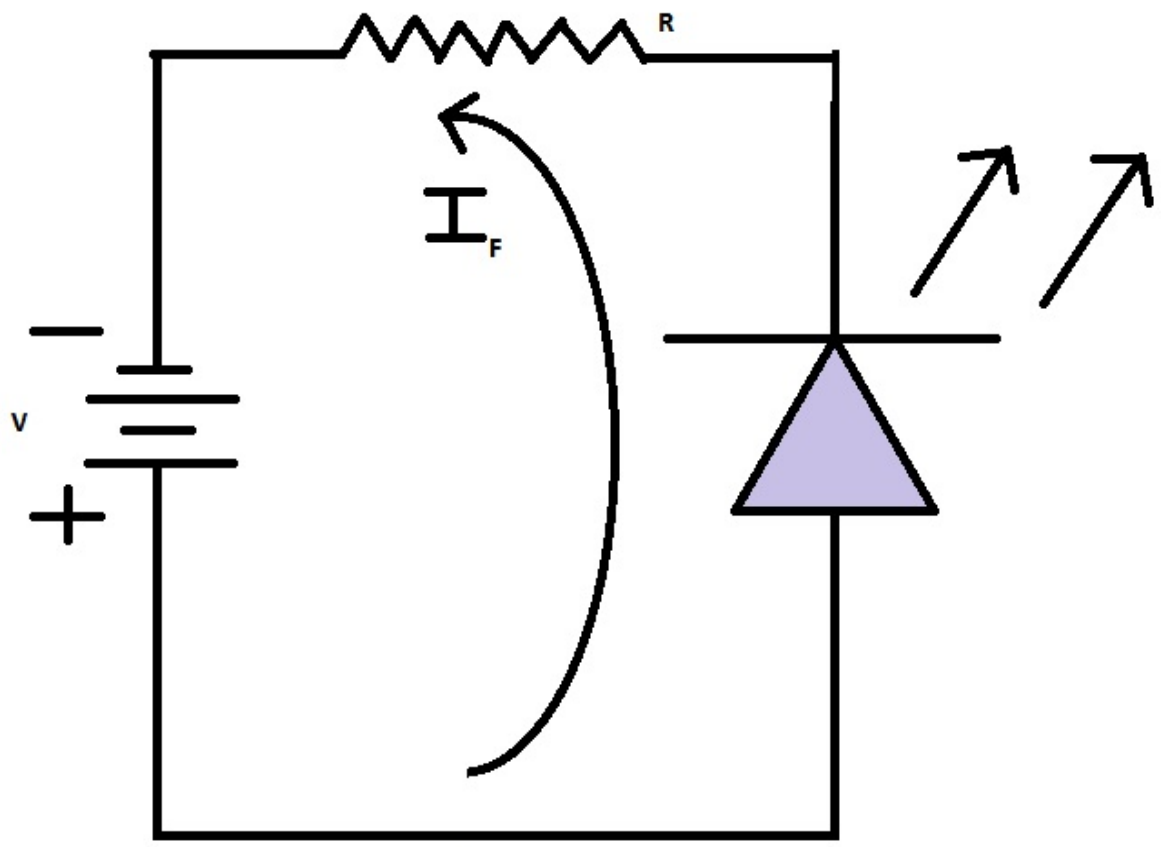

(Figure 5.7.4.1 LED in Forward Biased)

The graph shown in the figure is called as the output characteristic of LED. It shows the linear dependence of light output on the forward LED current. However, it is not possible to increase forward current indefinitely due to which typically the maximum value of forward current is 80 mA.

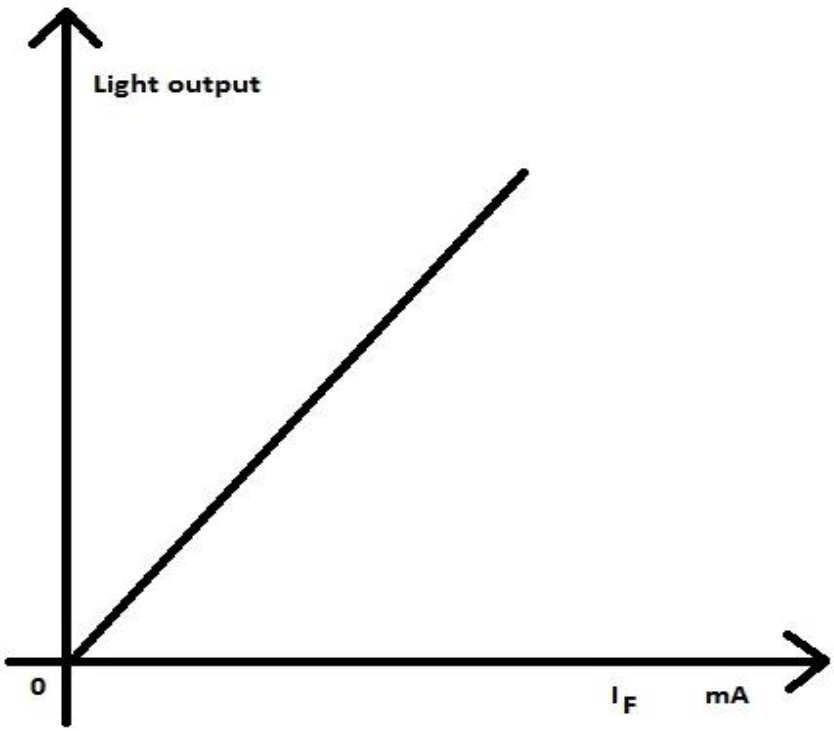

(Figure 5.7.4.2 Relation between Forward Current and Light Output)

5.7.5 Applications of LED:

1. LED is highly used in optocouplers.
2. In the infrared remote controls.
3. LED is mainly now-a-days used in large amount for applications in robotics.
4. As the indicators in various electronic circuits.
5. In seven segment display and alphanumeric displays.

5.8 Water Meter

5.8.1 Introduction

Water meters are used to measure the volume of water used by residential and commercial building that are supplied with water by public water supplier system. Water meters can also be used at water source, well, or throughout the water supply system to determine the flow at particular portion of system. Water meter measure flow in cubic meters of liters. There are several types of water meter, the choice depends on:

1. **The flow measurement,**
2. **Types of end users,**
3. **Required flow rate,**
4. **Accuracy requirement.**

5.8.2 Theory of metering devices:

There are two common approaches used for the water measurement these are:

a. Displacement approaches:
   Displacement design includes oscillating piston and nutating disk meters.
b. Velocity approaches:
   Velocity design include multi jet meter and turbine meters.

5.8.3 Types of water meters:

1. **Displacement water meters:**
   This type of water meter are generally used in residential and small commercial applications. Displacement meters are commonly referred as positive displacement. Displacement design includes oscillating piston and nutating disk meters.

2. **Velocity water meters:**
   In velocity water meters the speed of flow is converted into volume of flow to determine the usage of water. Its design include multi jet meter and turbine meters.

3. **Multi-jet meters:**
   These meters are very accurate and small in size, they are commonly used in small residential and industrial areas. Multi-jet meters are very accurate at low flow rates but they don't have larger size.

4. **Turbine meters:**
   Turbine meters are least accurate meters they are generally used for high flow rates and commercial applications, they are accurate in normal working conditions but are greatly affected by the flow profile and fluid conditions.

5. **Electromagnetic meters:**
   They are commonly referred as "Mag meters" are technically a velocity type water meter, mag meters are physical principle of faraday's law of induction and require AC or DC electricity from a power line or battery to operate electric.

6. **Ultrasonic water meters:**
   Ultrasonic water meters uses an ultrasonic transducers to send ultrasonic sound waves to fluid to determine the velocity of water. In these meters, the volume of water is calculated with high accuracy as water density changes with temperature, most ultrasonic water meters measure water temperature as component of water calculations.

5.8.4 Why meters are necessary?

When we use electricity in our daily life and pay it's bill we know its true value and use it efficiently. Similarly now-a-days we can find in our near areas that water is used by people in unnecessarily, so by applying meters we show the importance of water and stops it's wastage as well as by collecting the revenue we can also use the money in proper maintenance of the system in more better way.

Chapter 6

Optimization of automatic water distribution system

6.1 Introduction

Our system is "Automated Sector Defined Water Distribution System" which is used in our society now-a-days. On asking any person about the today's scene of water distribution few people will provide their positive response and peoples use to say that it doesn't give specific water supply at a proper time and pressure. As finding such problems we have designed our project in such a way that it will provide a 24x7 water supply to every house with specific flow but with a water meter installed. The meter will help the system to stand for a long time. This system operates on the basis of microcontrollers which will be programmed to make the whole system work automatically.

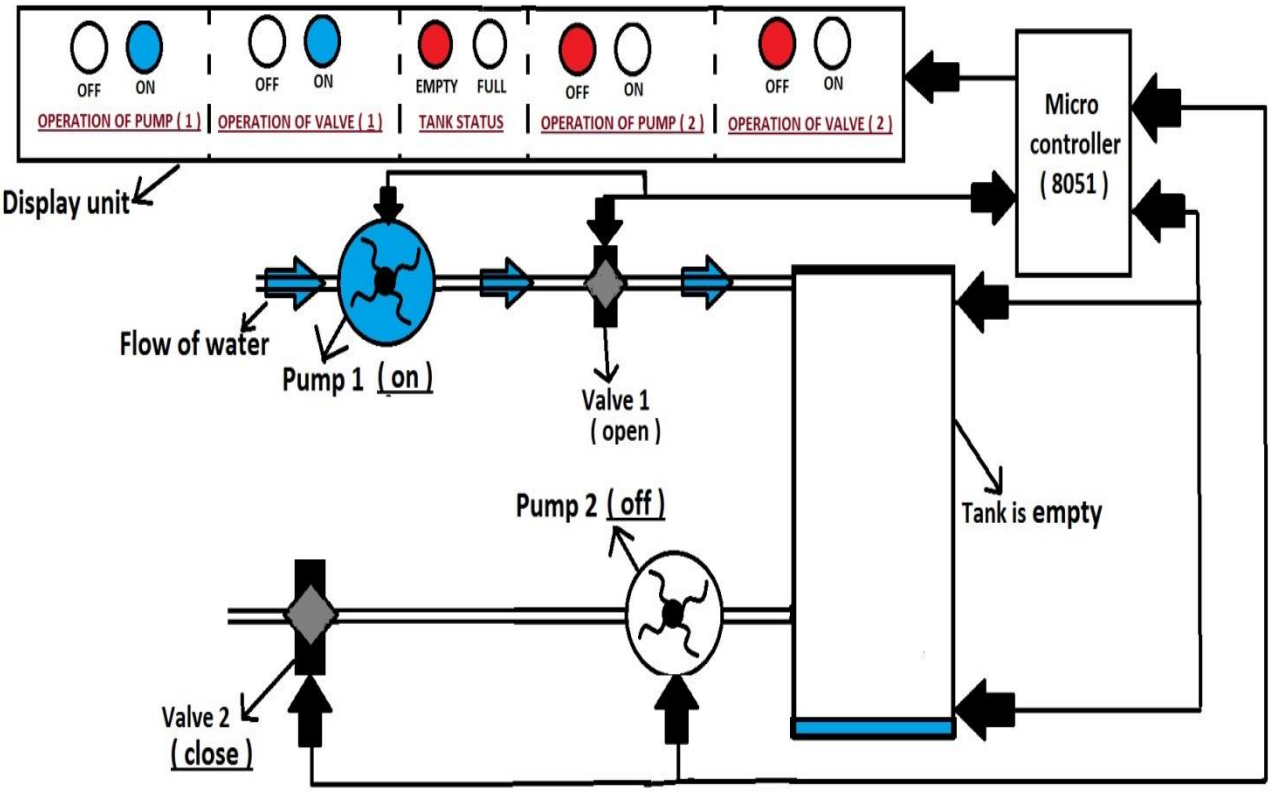

(Figure 6.1.1 Operation of Microcontroller when tank is empty)

The water is supplied from the water treatment plant, if the primary tank is empty the microcontroller send the signal to stepper motor and open valve, and water starts filling in tank. When the tank is fully filled the valve 1 gets closed and the valve 2 of secondary distribution gets opened and every sector's stank gets equal water supply. The microcontrollers are individually available at every sector which gives the operation for opening and closing of valves. Thus when the tanks gets filled the valve gets closed and when they get empty the valve gets opened automatically.

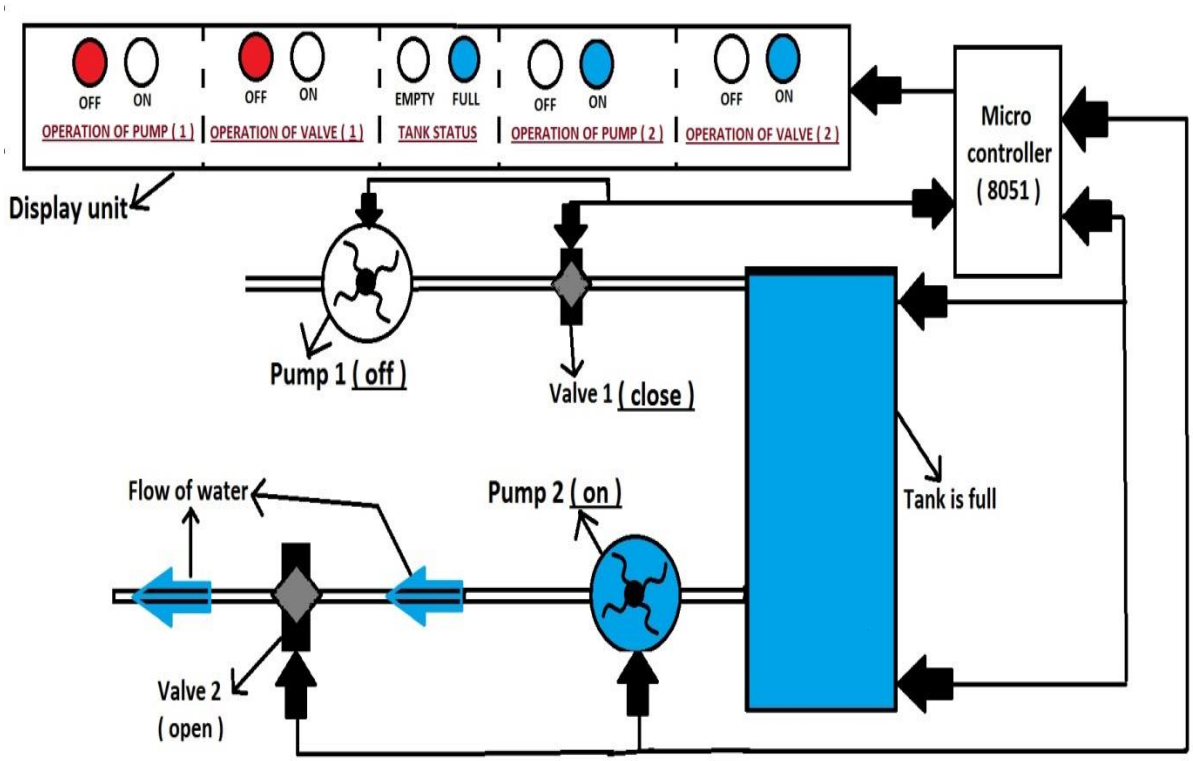

(Figure 6.1.2 Operation of Microcontroller when tank is Full)

6.2Block Diagram

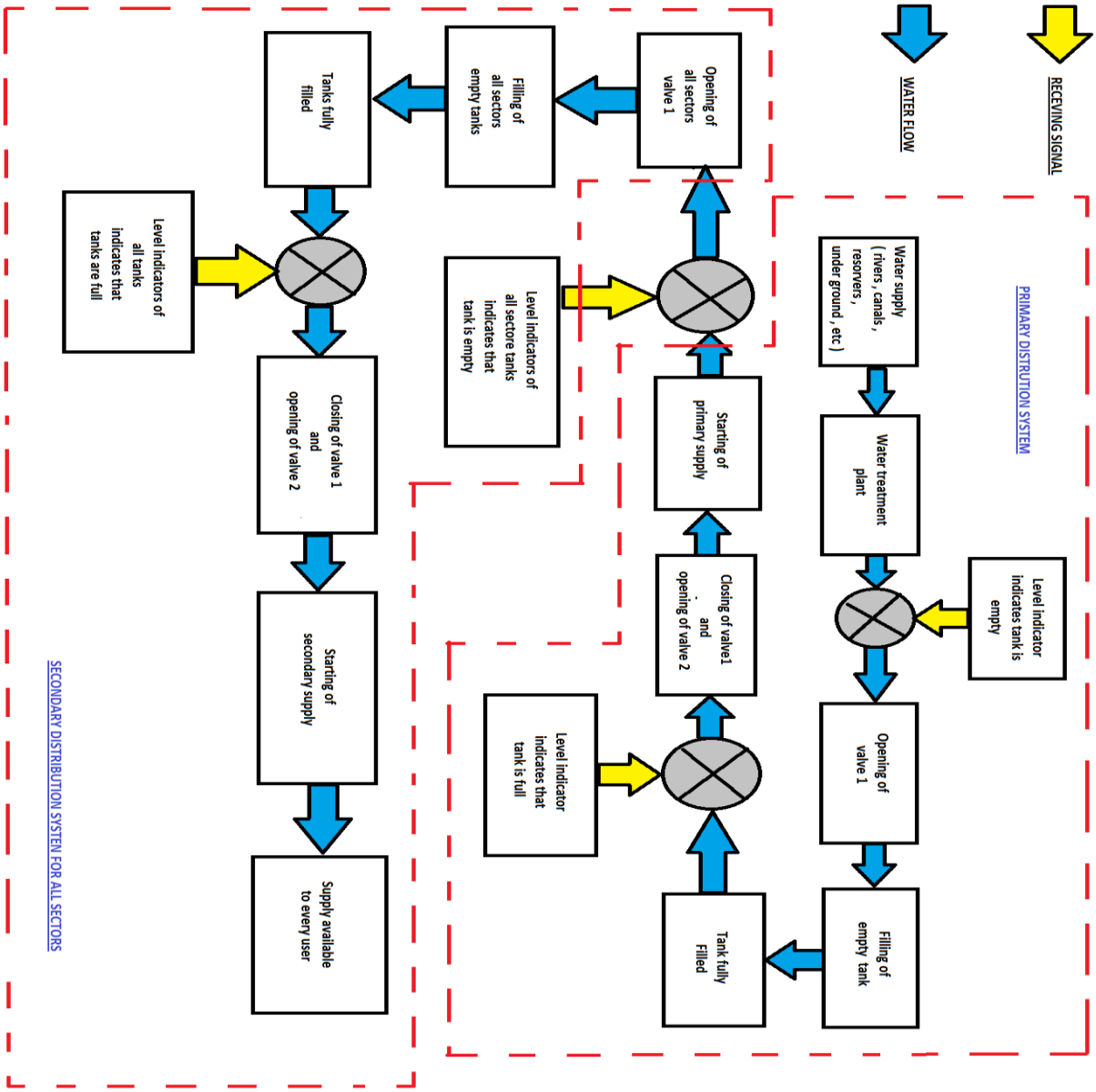

(Figure 6.2.1 Block Diagram of Automated Water Distribution System)

6.3. Flow Chart

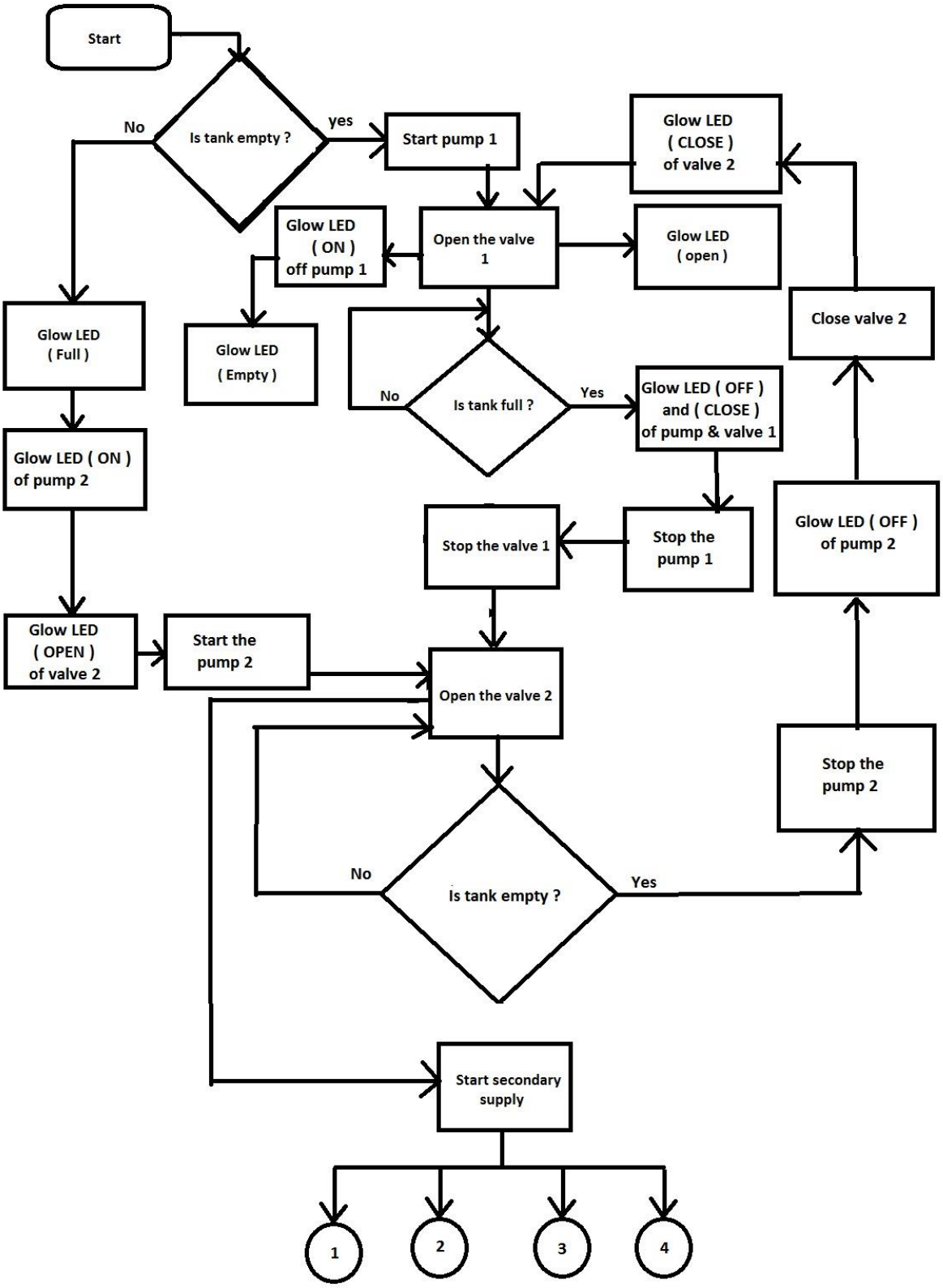

(Figure 6.3.1 Flow Chart of Primary Water Distribution)

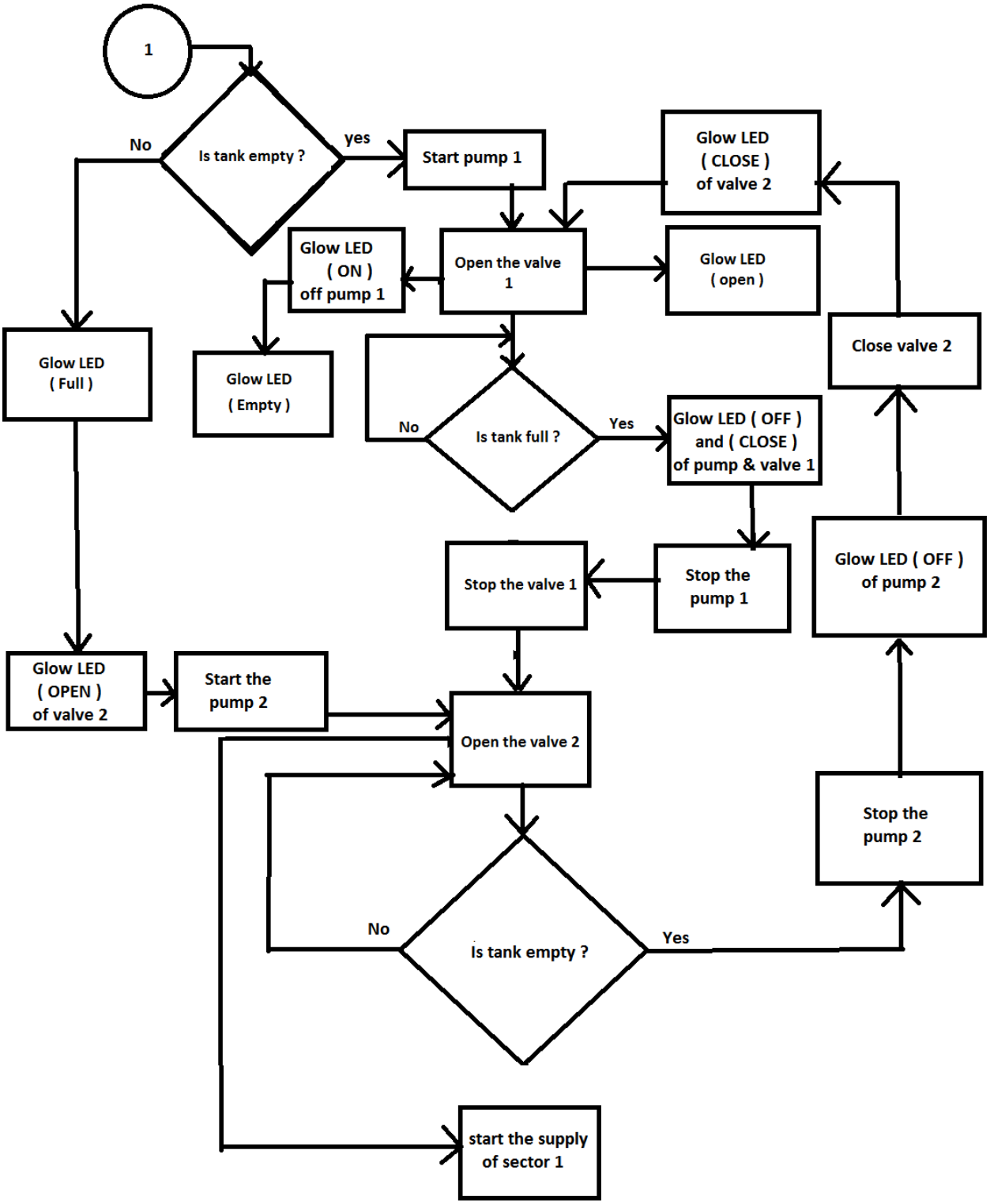

(Figure 6.3.2 Flow Chart of Water distribution in Sector 1)

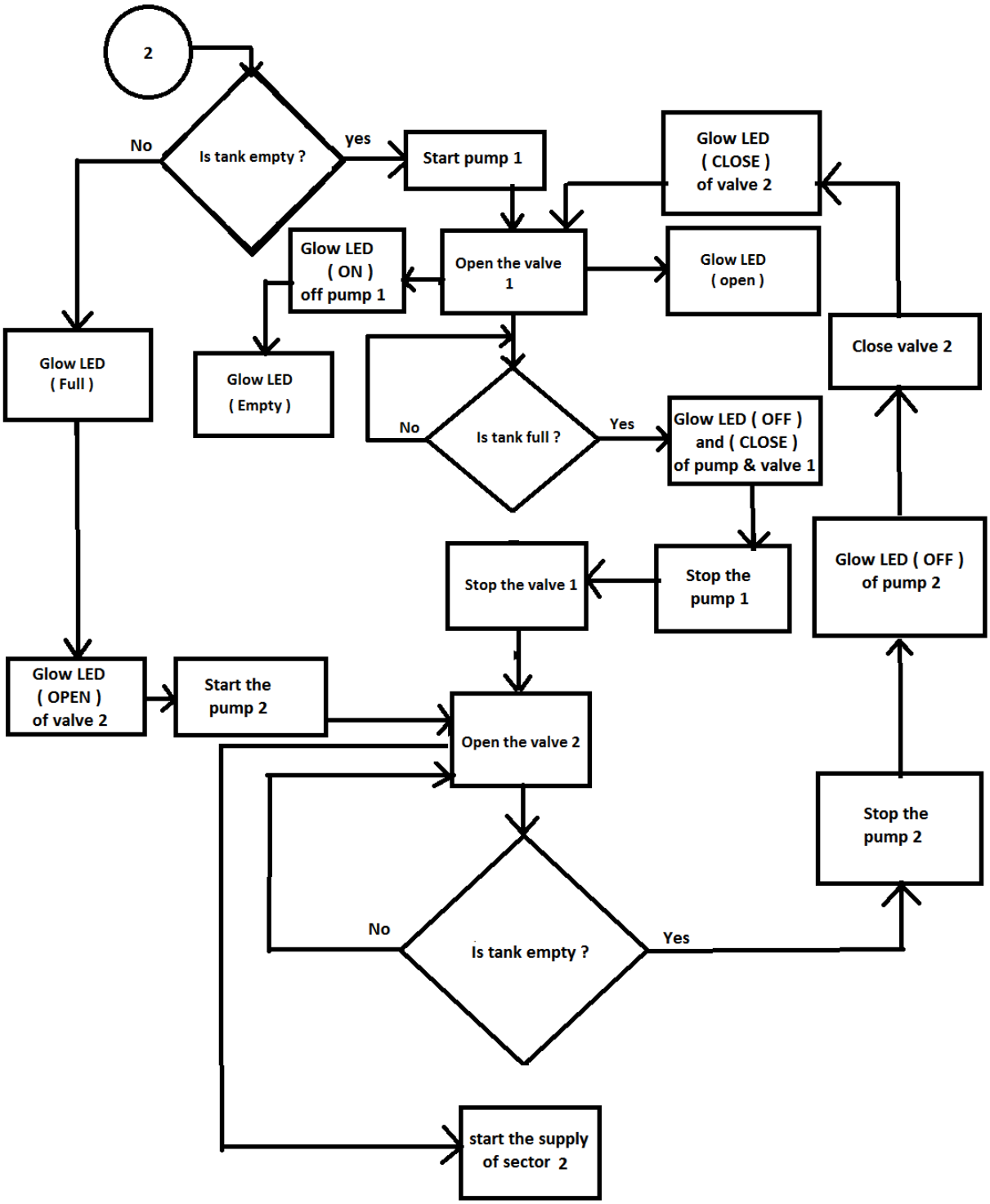

(Figure 6.3.3 Flow Chart of Water distribution in Sector 2)

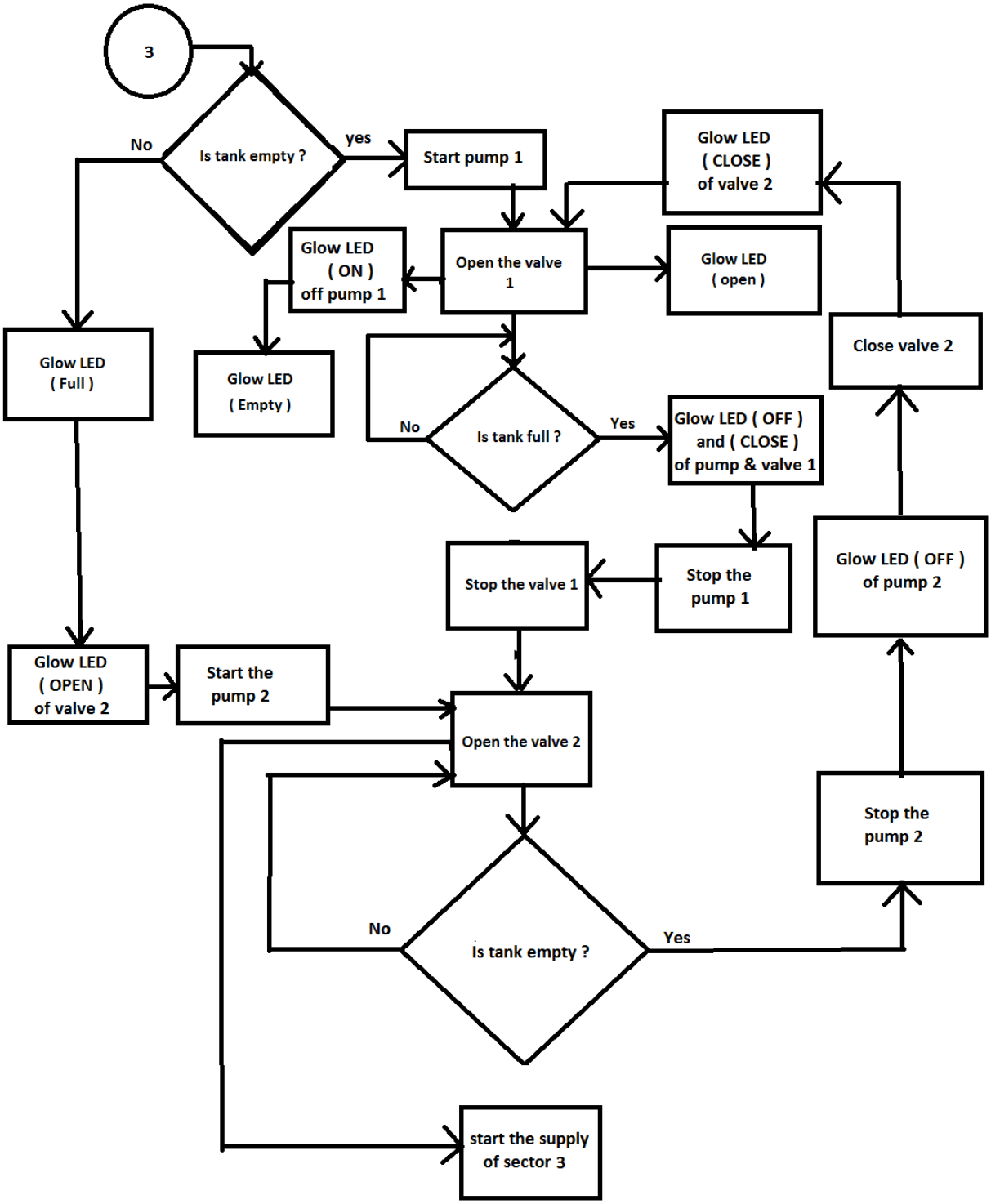

(Figure 6.3.4 Flow Chart of Water distribution in Sector 3)

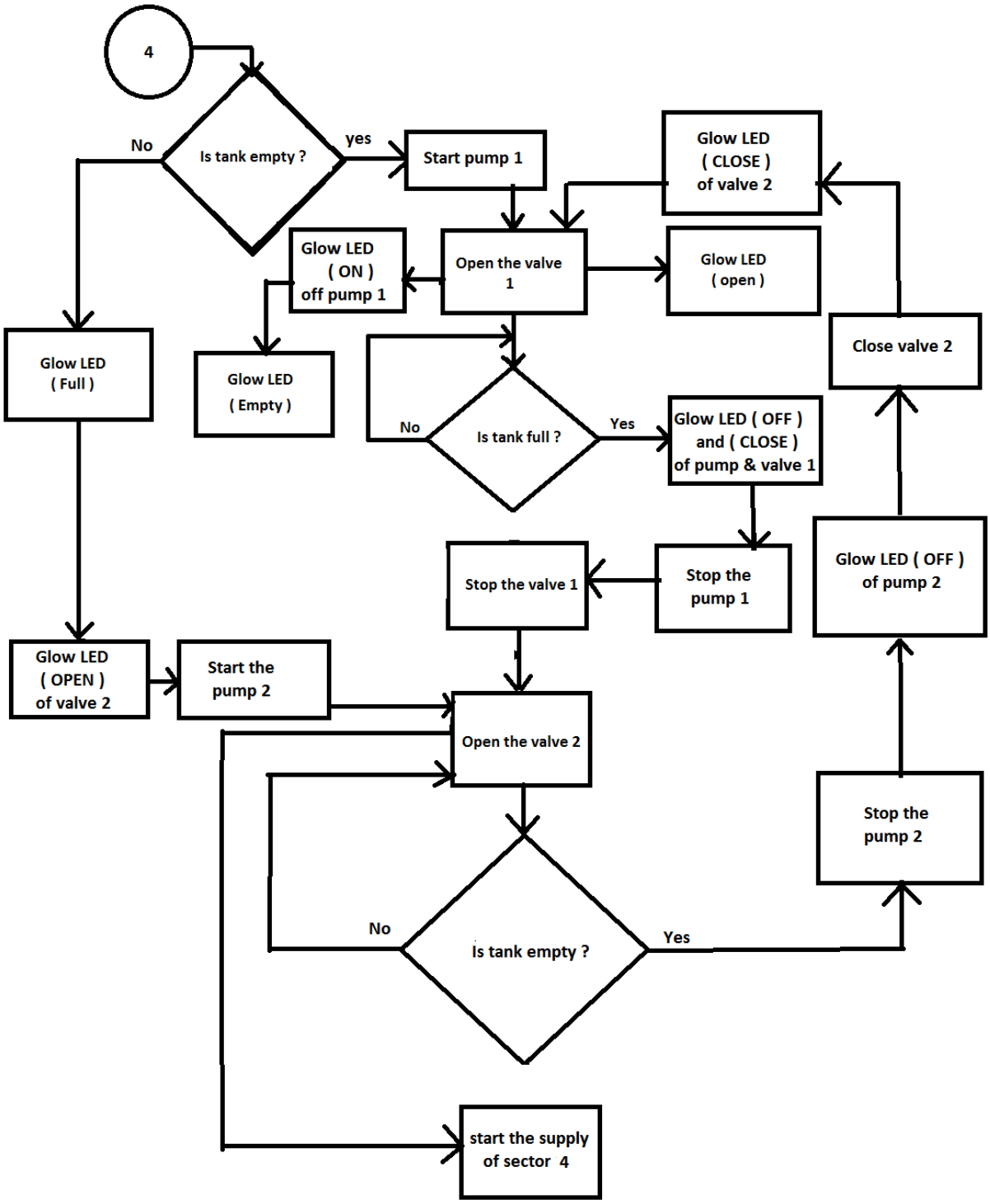

(Figure 6.3.5 Flow Chart of Water distribution in Sector 4)

6.4 Circuit Diagram

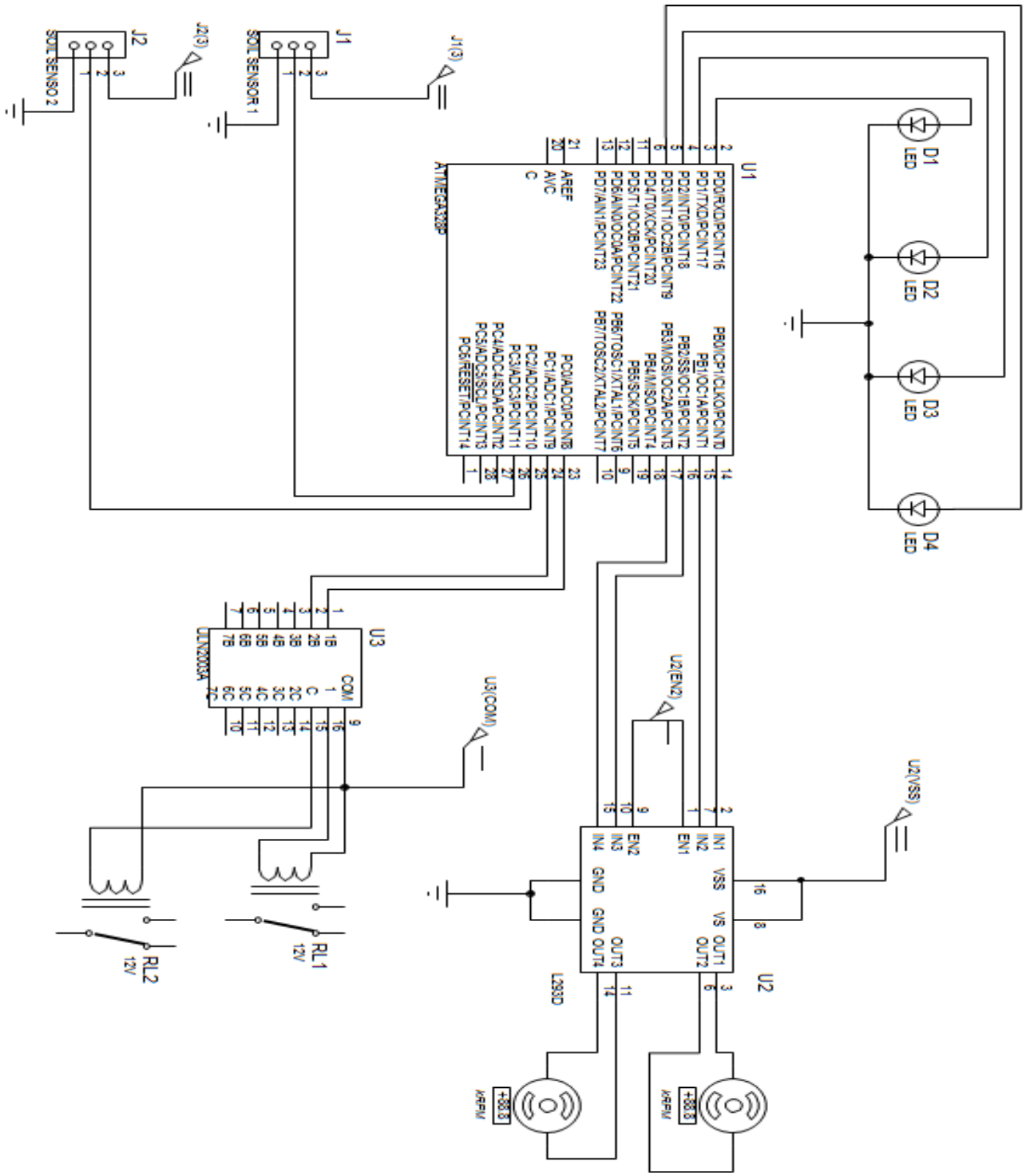

(Figure 6.4.1 Circuit Diagram)

6.5 Program Optimization

A computer program is a sequence of step-by-step instructions for the computer to follow. The computer will do exactly what you tell it to do, no more no less. The computer only knows what's in the program, not what you intended. Thus the origin of the phrase,
"Garbage in, garbage out".

The set of valid instructions comes from the particular programming language used. There are many languages, including C, C++, Java, Ada, Lisp, Fortran, Basic, Pascal, Perl, and a thousand others. The Arduino uses a simplified variation of the C programming language.
For any programming language, the instructions must be entered in a specific syntax in order forthe computer to interpret them properly. Typically, the interpretation is a two step process. Acompiler takes the language specific text you enter for the program and converts it into a machine readable form that is downloaded into the processor. When the program executes, theprocessor executes the machine code line by line.

All sequential programming languages have four categories of instructions. First are*operation* commands that evaluate an expression, perform arithmetic, toggle states of I/O lines, and many other operations. Second are *jump* commands that cause the program to jump immediately toanother part of the program that is tagged with a label. Jumps are one way to break out of thenormal line-by-line processing mode. For example, if you want a program to repeat over andover without stopping, have the last line of the program be a jump command that takes the program back to its first line. Third are *branch* commands that evaluate a condition and jump if the condition is true. For example, you might want to jump only if a number is greater than zero.Or, you might want to jump only if the state of an i/o line is low. Fourth are *loop* commands that repeat a section of code a specified number of times. For example, with a loop you can have a light flash on and off exactly six times

6.6 Arduino programing

Arduino program is written in any programming language with a compiler that produces binary machine code.

The Arduino project provides the Arduino integrated development environment (IDE), which is a cross-platform application written in the programming language Java. It originated from the IDE for the languages Processing and Wiring. It is designed to introduce programming to artists and other newcomers unfamiliar with software development. It includes a code editor with features such as syntax highlighting, brace matching, and automatic indentation, and provides simple one-click mechanism to compile and load programs to an Arduino board. A program written with the IDE for Arduino is called a "sketch".

The Arduino IDE supports the languages C and C++ using special rules to organize code. The Arduino IDE supplies a software library called Wiring from the Wiring project, which provides many common input and output procedures.

6.6.1 Specifications

The Atmel 8-bit AVR RISC-based microcontroller combines 32 KB ISP flash memory with read-while-write capabilities, 1 KB EEPROM, 2 KB SRAM, 23 general purpose I/O lines, 32 general purpose working registers, three flexible timer/counters with compare modes, internal and external interrupts, serial programmable USART, a byte-oriented 2-wire serial interface, SPI serial port, 6-channel 10-bit A/D converter (8-channels in TQFP and QFN/MLF packages), programmable watchdog timer with internal oscillator, and five software selectable power saving modes. The device operates between 1.8-5.5 volts.

6.7 Operative program

```
Char Usen=3,Lsen=2,ValveDw=12,ValveUp=11;
Char TankRed=10,TankGreen=9,UpPumpRed=8,UpPumpGreen=7;
Char LwPumpRed=6,LwPumpGreen=5,MotorDw=13,MotorUp=4;
boolean Up=0,Lo=0,flag=0;

void setup() {
  // put your setup code here, to run once:
Serial.begin(9600);
Serial.println("Water Level Sensor");
pinMode(Usen,INPUT);
pinMode(Lsen,INPUT);
pinMode(ValveUp,OUTPUT);
pinMode(ValveDw,OUTPUT);
pinMode(MotorUp,OUTPUT);
pinMode(MotorDw,OUTPUT);
pinMode(TankRed,OUTPUT);
pinMode(TankGreen,OUTPUT);
pinMode(UpPumpRed,OUTPUT);
pinMode(UpPumpGreen,OUTPUT);
pinMode(LwPumpRed,OUTPUT);
pinMode(LwPumpGreen,OUTPUT);

}

void loop() {
  Up=digitalRead(Usen);
  Lo=digitalRead(Lsen);
  Serial.print("Up =");
  Serial.print(Up);
  Serial.print("\t Lo =");
  Serial.println(Lo);
  if(Up ==0 && Lo == 0)
  { Serial.println("Upper Valve On");
    digitalWrite(ValveUp,1);
    digitalWrite(ValveDw,0);
    digitalWrite(MotorUp,1);
    digitalWrite(MotorDw,0);
    digitalWrite(TankRed,1);
    digitalWrite(TankGreen,0);
    digitalWrite(UpPumpRed,0);
    digitalWrite(UpPumpGreen,1);
    digitalWrite(LwPumpRed,1);
    digitalWrite(LwPumpGreen,0);
    flag=1;
        }
  else if (Up ==1 && Lo == 1)
 {  Serial.println("Down Valve On");
```

```
    digitalWrite(ValveUp,0);
    digitalWrite(ValveDw,1);
    digitalWrite(MotorUp,0);
    digitalWrite(MotorDw,1);
    digitalWrite(TankRed,0);
    digitalWrite(TankGreen,1);
    digitalWrite(UpPumpRed,1);
    digitalWrite(UpPumpGreen,0);
    digitalWrite(LwPumpRed,0);
    digitalWrite(LwPumpGreen,1);

    flag=0;
  }
  delay(500);
}
```

6.8 Conclusion

After working on automated water distribution system we conclude that our system is far more better and precise then the old system, still more factors can also be include in the system such as solar panels, electric generator as well as GPS enable tracking system of water channels. GSM systems will make our system more advance and take this system to new heights and gives a best comfort to our every users.

CHAPTER 7
COSTING

7.1 Introduction

Direct costs include the following:

- Salaries for team members on your project
- Specific materials, supplies, and equipment for your project
- Travel to perform work on your project
- Subcontracts that provide support exclusively to your project

Indirect costs fall into the following two categories:

- **Overhead costs:** Costs for products and services for your project that are difficult to subdivide and allocate directly. Examples include employee benefits, office space rent, general supplies, and the costs of furniture, fixtures, and equipment.

  You need an office to work on your project activities, and office space costs money. However, your organization has an annual lease for office space, the space has many individual offices and work areas, and people work on numerous projects throughout the year. Because you have no clear records that specify the dollar amount of the total rent that's just for the time you spend in your office working on just this project's activities, your office space is treated as an indirect project cost.

7.2 General and administrative costs:

- Expenditures that keep your organization operational (if your organization doesn't exist, you can't perform your project). Examples include salaries of your contracts department, finance department, and top management as well as fees for general accounting and legal services.

Suppose you're planning to design, develop, and produce a company brochure. Direct costs for this project may include the following:

- **Labor:** Salaries for you and other team members for the hours you work on the brochure
- **Materials:** The special paper stock for the brochure
- **Travel:** The costs for driving to investigate firms that may design your brochure cover
- **Subcontract:** The services of an outside company to design the cover art

Indirect costs for this project may include the following:

- **Employee benefits:** Benefits (such as annual, sick, and holiday leave; health and life insurance; and retirement plan contributions) in addition to salary while you and the other team members are working on the brochure
- **Rent:** The cost of the office space you use when you're developing the copy for the brochure
- **Equipment:** The computer you use to compose the copy for the brochure
- **Management and administrative salaries:** A portion of the salaries of upper managers and staff who perform the administrative duties necessary to keep your organization functioning

QUOTATION

SR NO	PRODUCTS		QTY	RATES (PER QTY)	TOTAL
1	PUMP (25 HP)	(FOR REGION SUPPLY)	1 Pics	156000	156000
2	PUMP (10 HP)	(FOR HOUSE HOLD SUPPLY)	5 Pics	78400	392000
3	CONTROLLING BOARD		6 Pics	6550	39300
4	DISPLAY SEGMENT (LED PANNEL)		6 Pics	1550	9300
5	VOLTAGE IC	(MOSFET . JFET)	6 PICS	56	336
6	CONNECTING WIRE		350 Meter	95 Per Meter	33250
7	LABOUR COSTING		10 Days	500 Per Day	5000
8	PROGRAMMING CHARGES		1 Program	1500	1500
			TOTAL AMOUNT		636686
			CREATION CHARGES		64000
			15% VAT		95509
			PAYABLE AMOUNT		**796195**

TERMS AND CONDITIONS :

1) OUR CREATION CHARGES ARE 10 % OF TOTAL BILL AMOUNT.
2) 50% OF AMOUNT SHOULD BE PAID IN ADVANCED AND REST AFTER COMPLITION OF WORK.
3) 15% VAT SHOULD BE GIVEN SEPARATETLY THEN THE BILL AMOUNT

(THIS QUOTATION IS FOR THE WATER SUPPLY FOR A REGION COVERED WITHIN THE DIAMETER OF 5 KM AREA.)

(EG : REGION HAS:

1. ONE SECONDARY TANK
2. 5 TANKS FOR HOUSE HOLD SUPPLY.
3. ONE SOCIETY WITH MAXIMUM 20 BUNGLOES WITH 2 FLOORS.

CHAPTER 8
FUTURE PROSPECTIVE

8.1. Introduction:

This chapter use to show the future aspects of the "Automated Water Distribution System" which can be applied in future in order to make this system more effective.

8.2 Generation of Electricity:

Electricity can be generated by utilizing the flow of water in pipes at the distribution system. Here a generating turbine is connected and kinetic of water is converted to electrical energy. When high speed water flow through the turbine, it rotates and which in-turn rotate the alternator shaft and produces change in flux which results in production of emf. When all the armature are connected to each other this emf produces the flow of current in the armature of the winding.

8.3 Automatic Irrigation System:

An automated irrigation system refers to the operation of system with no or just a minimum manual sensors or computers or mechanical appliances. The automated sectorial water distribution system makes the irrigation process more efficient and workers can concentrate on their important farming tasks. As India being world's second most populous country our economy hugely depends on irrigation process.

An automation of irrigation system has several advantages. Once installed, the water distribution on fields or small scale gardens is easier and doesn't have to be permanently controlled by an operator. Automation of irrigation system refers to the operation of system with o or minimum intervention.

8.4 Automated Sector Defined Water Distribution System using Solar Energy:

In the present scenario availability of drinking water is large problem in many states. Many people have been suffering a lot to bring water in time. The monitoring of water can prevent the occurrence of stealing and leaking of water effectively for household. In traditional

system there is no proper method followed for the distribution of water. To overcome this difficulty in conventional system automatic water distribution system has been imposed. In order to make this system more efficient and pollution free, solar energy is used as an alternative source for power supply.

In automated sectorial defined water distribution system the power in the whole system will be provided by the solar panel, this will help in reducing cost of electricity. This will power almost entire system and will make the system more reliable. Since, solar energy is completely natural, it is considered to be a clean energy source. It doesn't disturb the environment or create a threat to eco system, the way oil or other energy sources does. It doesn't cause greenhouse gases, air or water pollution.

REFERENCE

1. **Stepping Motor Tutorial by Dr. Douglas W. Jones (http://www.cs.uiowa.edu/~jones/step/#introduction), Copyright 1995**

2. **Stepper Motor Tutorial by Rustie Laidman (http://209.41.165.153/stepper/), Copyright 2000**

3. **Article: The Rise of VSR Motor, Grey Paula, Mechanical Engineering Magazine; Copyright 1998 by The American Society of Mechanical Engineers.**

4. **Mazidi Muhammad Ali "The Microcontroller and Embedded Systems", Prentice Hall of India, New Delhi, India, pp. 492-507, Chapter 17.**

5. **https://en.wikipedia.org/wiki/Solenoid_valve.**

6. **Parr, Andrew (2011). "Hydraulics and Pneumatics a technician's and engineer's guide", p. 38. Elsevier.**

7. **https://en.wikipedia.org/wiki/Water_pump.**

8. **RamleelaKhare, Dr.Fillliperodrigues, & E. Mela; " Automation of water distribution plant", International journal of Research in Engineering and Advanced Technology, Vol.2, pp:1-6, 2014.**

9. **Aunbhapanchal, Ketakee Dagade, Shubhangi Tamhane, Kiran Pawar, & Paradnya Ghadge; "Automated water supply system & Water theft Identification Using PLC and SCADA", International journal of Engineering Research and Applications, Vol.4, Issue.4, pp: 67-69, April 2014.**

10. **Ayamal Alinhussein & Mohammed Adedalati; " A Supervisitory Control and Data Acquistion (SCADA) for water pumping station of GAZA", The Islamic University Journal, Vol.19, pp:303-321, 2011.**

11. **J.P. Shridharanyaa, Jagadeesan.A, & Lavanya. A; "Theft Identification and Automated Water Supply System Using Embedded Technology", International Journal of Advanced Research in Electrical, Electronics and Instrumentation Engineering, Vol.2, pp:1-7, 2013.**

12. **Bhawarkr.N.B, Pande.D.P, Sonone.R.S, Pandit.P.A & Patil.P.D; "Literature Review for Automted Water Supply with Monitoring the Performance System", International Journal of Current Engineering and Technology, Vol.4, pp:1-4, 2014.**

13. **Gowri Shankar; " Control of Boiler Operation Using PLC& SCADA", International Journal of Multi Conference of Engineering and Computer Scientists, Vol.2, pp:1-6, 2008.**

14. **Gaikwad Sonali Ashok; "Water Anti-theft and Quality Monitoring System by Using PLC & SCADA", International Journal of Electrical and Electronics Engineering Research, Vol.3, Issue.2, pp:355-364, June, 2013.**

15. **Eswaran .P,& Aswin Kumar; " Conceptual Design and Development of Water Metering System for Multiple family Residential Buildings", International Journal of Advanced Computer Research, Vol.2, No.4, Issue. 6, December, 2012.**

16. **Shinya Ito and Kenji Yoshigoe; "Performance Evaluation of Consumed energy-Type-Aware Routing (Cetar) for Wireless Sensor Networks", International Journal of Wireless & Mobile Networks (IJWMN), Vol.1, No 2,pp. 90-101, November 2009.**

Conclusion:

The automatic water distribution system eliminates water wastage, the automatic system provides continuous water flow according to set point and reduce lot of man power. The automatic implementation in water distribution system insures to avoid wastage of water and reduce time consumption, it also avoids the water theft in pipe lines so that people could get equal share of water this system is excellent to prevent drinking water loss and theft.

The proposed system can make water management more effective and convenient to the public. This method can possible solve the problem of traditional method of water distribution.

We hope the proposed idea can make a great change in the cooperation water distribution system and can give benefit to the government by reducing the wastage of water , man power and time .